BB 10 CNC

High-Precision
Centreless Grinding

JUNKER
BSH Machines

Centreless Cylindrical Grinding

▶ efficient ▶ precise ▶ reliable

Machine concept

The BB 10 CNC centreless cylindrical grinding machine has been further developed to take advantage of the latest advances in grinding technology. Practical experience, the latest design principles, and the most modern CNC technologies have all been employed to meet the exact needs of the machine operator.

High efficiency both for large series production and for small batches through fast process sequences.

Grinding cell: characteristic for dimensional accuracy and surface quality

Workpiece data

Workpiece diameter: . . . . . 3 - 100 mm
Workpiece length: . . . . . variabel

Grinding spindle unit

Grinding wheel dimensions (DxBxd): . . 500x200x305 mm
Control wheel dimensions (DxBxd): . . . 300x200x127 mm
Drive power, standard: . . . . . 22 kW
Circumferential speed: . . . . . max. 45 m/s
Resolution of the infeed axes: . . . . . 0,0005 mm

Machine data

Feed of grinding and control heads: . . . X1/X2-axis, CNC
Feed of diamond grinding-wheel dresser: . . U1-axis, CNC
Longitudinal feed of grind.-wheel dresser: . W1-axis, CNC
Feed of diamond control-wheel head: . . . . . U2-axis, CNC
Longitudinal feed of contr.-wheel dresser: . W2-axis, CNC
Rotational speed of control-wheel spindle: SP2-axis
Dimensions of machine
(B x D x H): . . . . . 3.190 x 4.035 x 2.200 mm
Weight of machine: . . . . . ca. 4.800 kg

Design characteristics

- Compact machine layout with high static, dynamic and thermal stability.
- Precision grinding spindle on one-sided hydrodynamic bearings.
- Systems for dressing grinding and control wheels.

Performance profile

- Grinding operations:
  through-feed grinding, plunge grinding
- Grinding programs:
  manual, automatic
- Truing programs:
  manual, automatic with compensation

Control panel

BSH Holice Ltd.
Sokolovská 68/105
18600 Praha 8-Karlín
Czech Republic

Phone: +420 (0)2 24890610
Fax: +420 (0)2 24818244
E-Mail: info@junker.cz
www.junker-group.com

We reserve the right to make changes in the interests of technical progress.

8.14962 E 0302

JUNKER
partner for precision

DRILLMAT

Complete machining of spiral drills

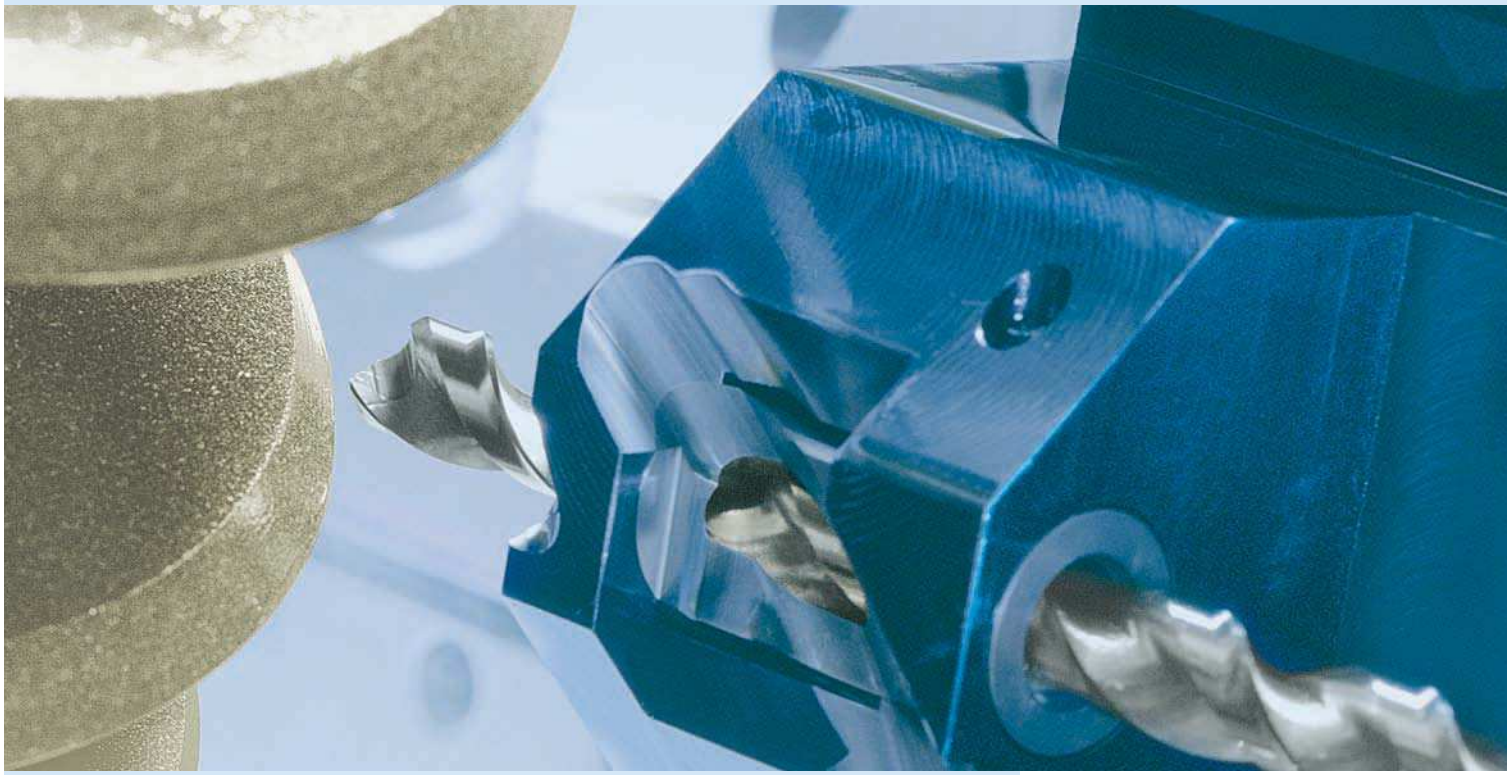

DRILLMAT 3000 L

DRILLMAT 3000 S

DRILLMAT 3000 TC

Twist drill production from solid blanks

**In one clamping –
precise and cost-effective**

The DRILLMAT 3000 cutting tool grinder is the ideal JUNKER technology for grinding twist drills made of HSS or HM. Three base variants allow individual adaptation to the most diverse requirements in the area of twist drill production. The individual machine structure guarantees the highest possible efficiency for the production of any size series.

- Grinding flutes, backs and cutting geometry in one clamping
- Grinding the flutes and backs in a bushing and thus with stable support
- Up to four grinding wheels can be mounted on the grinding spindle at the same time (corundum or diamond grinding wheels)

DRILLMAT 3000 L

- Cutting diameter Ø 5 - 16 (25 mm with manual loading)
- Maximum workpiece length 305 mm for automatic and 400 mm for manual loading.
- Productive due to dressing system without speed control on the right on the grinding table: enables dressing during the loading cycle
- Double tray loading system integrated at the front in the machine cover
- Bushing support for machining the flutes and backs

DRILLMAT 3000 S

- Cutting diameter Ø 2 - 10 mm
- Maximum workpiece length 300 mm
- Productive due to dressing system without speed control behind the grinding spindle: enables dressing during the grinding
- Double tray loading system integrated at the front in the machine cover
- Bushing support for machining the flutes and backs

DRILLMAT 3000 TC

This DRILLMAT 3000 TC variant is specially designed for grinding carbide twist drills in one clamping.

- Machining: Flutes, backs, negative chamfer on the centre
- For the most diverse cutting geometries
- Loading / unloading system: inside loading portal with handling cell on the outside
- 3-point back rest support special version

Workpiece geometry simulation with JUWOP/VG

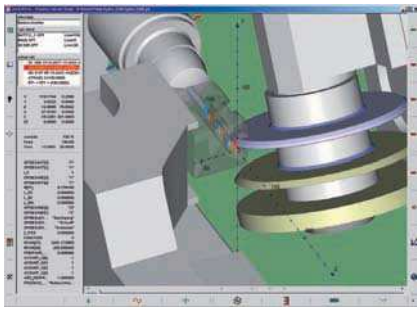

Machining flute

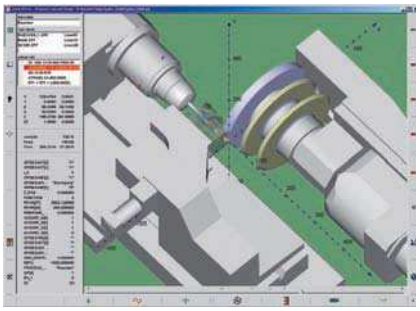

Machining back

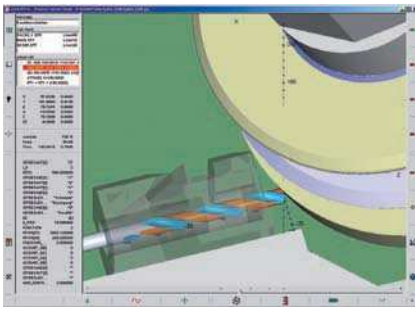

Machining cutter

Complex CNC control

The DRILLMAT 3000 L and the DRILLMAT 3000 TC have six CNC axes. The DRILLMAT 3000 S has eight CNC axes as the vertical and horizontal movement of the dressing system is also CNC-controlled here.

CNC axes for DRILLMAT L, TC:

- Y-axis: Height adjustment and feed and swivel movement of the grinding wheels: vertical wheelhead
- X-axis: Horizontal movement
- A-axis: Swivel movement
- C-axis: Workpiece rotation movement
- Z1-axis: Grinding table axial movement
- Z2-axis: Workhead longitudinal movement

CNC axes for DRILLMAT S:

- Y-axis: Height adjustment and feed and swivel movement of the grinding wheels: vertical wheelhead
- X-axis: Horizontal movement
- A-axis: Swivel movement
- C-axis: Workpiece rotation movement
- Z1-axis: Grinding table axial movement
- Z2-axis: Workhead longitudinal movement
- X2-axis: Dressing device infeed axis
- Y2-axis: Dressing device feed axis

Cost and technical benefits

- Flexible production in one clamping
- Maximum productivity
- Integrated dressing system
- Operator prompting shortens programming time
- Short retooling times using quick-change systems
- Free choice of external loading systems for the Drillmat TC
- Constant chip removal performance with constant grinding wheel peripheral speed
- Peripheral speed of each grinding wheel is freely programmable
- Automatic cooling nozzle compensation
- Sophisticated cooling nozzle system with individually controllable coolant circuits

Standard equipment for DRILLMAT 3000 L, DRILLMAT 3000 S: JUNKER double tray loading system

DRILLMAT 3000 TC with completely automated loading and unloading system (JUNKER handling cell combined with internal portal loading system)

Components for precision and productivity

Equipment DRILLMAT

- Vibration damping, torsion-resistant machine stand made of cast mineral composite
- Hydrostatic circular guides, wear free
- 3-point mounting system on grinding spindle
- Grinding spindle with integrated, completely automatic, dynamic balancing system
- Jukomet HF high performance spindle
- DRILLMAT 3000 L and 3000 TC: 20 kW drive power
- DRILLMAT 3000 S: 11 kW drive power
- Stable workpiece support
  DRILLMAT 3000 L and DRILLMAT 3000 S: bushing support
  DRILLMAT 3000 TC: 3-point back rest

Integrated dressing system

- Rotating diamond wheel for dressing
- Fast and uncomplicated dressing of the corundum grinding disc to the new profile
- Particularly cost-effective for small series
- DRILLMAT 3000 L and DRILLMAT 3000 TC: Dressing system mounted on the table makes dressing possible during the loading
- DRILLMAT 3000 S: 2-axis dressing system behind the grinding spindle enables dressing during the grinding

Ready for the future: Machine concept Evolution^2

The JUNKER Evolution^2 concept is a platform concept where the Tooltec machines for cutting tool production are also integrated. Benefits for the machine operators are mainly the synergy effects for operation of several machines, such as more efficient service and reduced spare part inventory and higher availability due to proven components. The consistent operating concept is advantage in daily production as the machine operators can switch between several machines without having to re-accustom themselves to each one.

"Face" grinding operation

Dressing

JUNKER grinding line for twist drill production

Machining steps perfectly matched to each other are the prerequisite for maximum cost-effectiveness in mass production of cutting tools. JUNKER provides a well-thought out solution from the blank up to the finished twist drill.

QUICKPOINT 3000 Blank
The machine concept for manufacturing "off the rack" tool blanks

DRILLMAT 3000 S
The machine concept for grinding HSS twist drills Ø 2 - 10 mm in one clamping

Equipment variants and options

DRILLMAT 3000 L and 3000 S:
With JUNKER double tray loading system

The loading system for the DRILLMAT 3000 L and DRILLMAT 3000 S versions is standard equipment. The automation is optimally adapted to the configuration of the machine.

JUNKER double tray loading system for DRILLMAT 3000 L and 3000 S

DRILLMAT 3000 TC:
Freely selectable loading system

The external automation for the DRILLMAT 3000 TC can be selected by each customer individually. Using the keyhole solution, the workpiece transfer from the internal handling system can be made to practically any external loading system. Connection to existing automation systems is, of course, also possible. The workpiece magazines are also freely selectable:

- Pallets
- Cassettes
- JUNKER magazine discs
- Customer-specific magazines

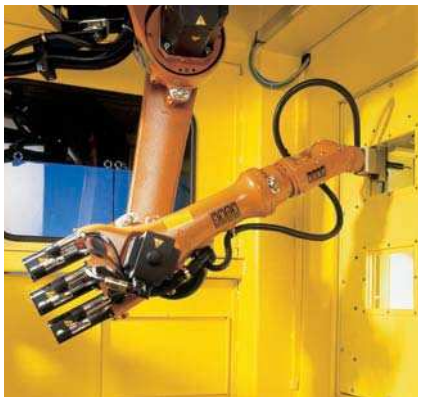

Completely automated loading and unloading system for DRILLMAT 3000 TC (JUNKER handling cell combined with internal portal loading system)

DRILLMAT 3000 L
The machine concept for grinding HSS twist drills Ø 5 - 25 mm in one clamping

DRILLMAT 3000 TC
The machine concept for grinding HM twist drills Ø 5 - 16 (25) mm in one clamping

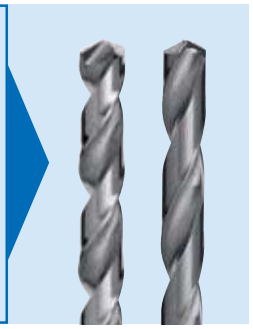

The central JUNKER CNC control concept

An open system

The concept: central control technology for all grinding machine components. All inputs and data run via the EJ-OP Erwin Junker operator panel. On DRILLMAT machines, this panel is the user interface for a Siemens Sinumerik 840D CNC controller.

Start-up: simple and safe

The JUNKER hardware and software concept significantly reduces installation time for the DRILLMAT twist drill grinding machines. Special software tools are used to ensure safe and gradual start-up.

Teleservice: swift and efficient

The first port of call for all questions and problems are the staff at JUNKER Service. All data available on the machine's status can be analysed online as required. This JUNKER service increases system availability, thus keeping service costs low.

The benefits of the hardware and software concept:

- All components are accessible via Teleservice
- Identical operation of different machines, irrespective of the controller used
- Standardised operator interface for all components
- Automatic data backup, including the settings for all externally purchased assemblies

EJ-OP operator panel: standard for all machines

- Graphic display of interactive processes during programming and operation
- Reduced training requirement
- Minimised risk of operating errors
- Swift retooling and set-up
- All machining parameters stored
- Machine programming, optionally also centrally, e. g. during preparation phase

Erwin Junker EJ-OP operator panel

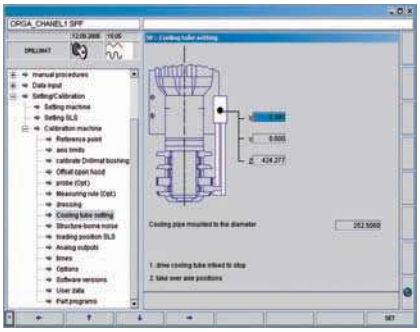

Cooling pipe provision

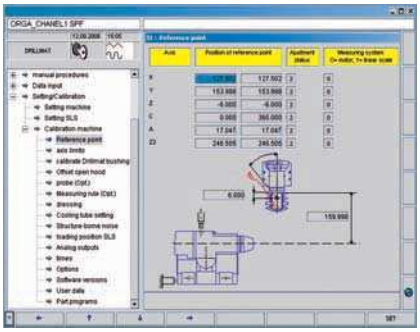

Machine calibration

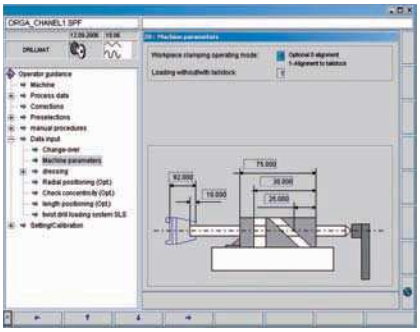

Machine parameters

Technical data

Series	DRILLMAT 3000 L	DRILLMAT 3000 S	DRILLMAT 3000 TC
Workpiece data			
Workpiece diameter	5-16 (25) mm	2 - 10 mm	5 - 16 (25) mm
Workpiece length (automatic loading) Workpiece length (manual loading)	63 -305 mm max. 400 mm	40 -300 mm max. 300 mm	50 -250 mm max. 400 mm
Grinding length	max. 350 mm	max. 250 mm	max. 350 mm
Pitch, right	12° - 45°	12° - 45°	25° - 45°
Grinding spindle swivel max.	53° L.H. / 90° R.H.	53° L.H. / 90° R.H.	53° L.H. / 90° R.H.
Grinding wheel data			
Abrasive	Corundum	Corundum	Diamond
Number of grinding wheels	max. 4	max. 4	max. 4
Max. grinding wheel diameter	250 mm	200 mm	250 mm
Min. grinding wheel diameter	175 mm	120 mm	175 mm
Bore diameter of grinding wheel	76 mm	50.8 mm	76 mm
Width of grinding wheel package	120 mm	90 mm	120 mm
Grinding spindle			
Grinding type	High-speed grinding	High-speed grinding	High-speed grinding
Grinding spindle	Jukomet HF high performance spindle	Jukomet HF high performance spindle	Jukomet HF high performance spindle
Drive power	20 kW	11 kW	20 kW
Profile on the grinding wheel			
Diamond wheel diameter	130 mm	130 mm	130 mm
Diamond wheel bore	10 mm	10 mm	10 mm
Machine data (without accessories)			
Dimensions (width x depth x height)	3,900 x 3,400 x 2,000 mm	3,900 x 3,400 x 2,000 mm	4,100 x 3,400 x 2,000 mm
Weight	approx. 9,000 kg (incl. double tray loading system)	approx. 9,000 kg (incl. double tray loading system)	approx. 8,000 kg

JUNKER
partner for precision

EUROPE

JUNKER Maschinen

Erwin Junker
Maschinenfabrik GmbH
Junkerstraße 2
77787 Nordrach
Germany

Phone: +49 (0)7838 84-0
Fax: +49 (0)7838 84-302
E-Mail: info@junker.de
www.junker-group.com

JUNKER Grinding Technology

Erwin Junker
Grinding Technology Mělník Ltd.
Sokolovská 68/105
18600 Praha 8-Karlín
Czech Republic

Phone: +420 2 24 89 06 10
Fax: +420 2 24 81 82 44
E-Mail: info@junker.cz
www.junker-group.com

JUNKER BSH Machines

BSH Holice Ltd.
Pardubická 332
53413 Holice
Czech Republic

Phone: +420 466 00 31 11
Fax: +420 466 68 21 49
E-Mail: info@junker.cz
www.junker-group.com

EUROPE

JUNKER Machines Outils

JUNKER France
13 rue Camille-Desmoulins
92441 Issy Les Moulineaux Cedex
France

Phone: +33 (0)1 58042781
Fax: +33 (0)1 58042300
E-Mail: info@junker-france.com
www.junker-group.com

JUNKER Machine Tools

Junker Machine Tools &
Technology (UK) Ltd.
Hadleigh House
32 Sefton Road, Fulwood Park
Sheffield S10 3TP
U.K.

Phone: +44 (0)114 230 34 53
Fax: +44 (0)114 230 93 82
E-Mail: info@junker-group.co.uk
www.junker-group.com

NORTH AMERICA

ERWIN JUNKER

High Performance Grinding Systems

Erwin Junker
Machinery Inc.
1524 Davis Road
Elgin, IL 60123
USA

Phone: +1 847 488 0406
Fax: +1 847 488 0436
E-Mail: info@junker-usa.com
www.junker-usa.com

ASIA

JUNKER Maschinen

Erwin Junker Maschinenfabrik GmbH
Shanghai Representative Office
Rm. G. H, 11 Floor, North Gate Plaza
No.99 Tianmu Road West
Shanghai 200070
P.R. China

Phone: +86 (0)21 63 80 69 11
Fax: +86 (0)21 63 80 69 55
E-Mail: info@junker.com.cn
www.junker.com.cn

JUNKER Maschinen

Erwin Junker Maschinenfabrik GmbH
Beijing Representative Office
Rm. 1606 Liye Building
No.71 Majiapu Road East, Fengtai Dist.
Beijing 100068
P.R. China

Phone: +86 (0)10 51 16 50 66
Fax: +86 (0)10 51 16 50 22
E-Mail: info@junker.com.cn
www.junker.com.cn

We reserve the right to make changes that serve technical progress. Marschner+Kühn

8.31625 E 0607

Ein innovatives Maschinenkonzept für flexible Nutzung

Die Rundschleifmaschine EJ 10 ist zum Außenschleifen von zylindrischen Teilen durch Einstech- und Pendelschleifverfahren geeignet. Sie wurde unter Berücksichtigung der aktuellsten schleiftechnischen Erkenntnisse entwickelt.

Erfahrungen im Bereich der präzisen Bearbeitung kleiner Teile, neuste Konstruktionsprinzipien und modernste CNC-Technologien wurden genau auf die Bedürfnisse und Ansprüche des Kunden umgesetzt.

Das wirtschaftliche und flexible Maschinenkonzept erfüllt alle Anforderungen - vor allem im Bereich der Großserienfertigung.

An innovative and flexible machine concept

The cylindrical grinding machine of type EJ 10 is suitable for realizing applications such as O.D. grinding of cylindrical components in plunge-cut and oscillating grinding operations. This machine is a state-of-the-art development based on the latest findings in grinding technology.

Experience in precision grinding of small components, latest design as well as state-of-the-art CNC technology have been set together in order to fulfil customer's needs.

This is an economical and effective machine concept which meets all requirements, especially suitable for applications in large scale production.

Beispiele aus der Praxis / Examples

Optionen / Options

- Mess-Systeme
- Abrichtsysteme:
  - Rotierendes Diamantrad
  - Einrollvorrichtung
- Ladesysteme
- Kühlmittel-/Reinigungs-systeme

- Measuring systems
- Dressing systems:
  - rotating diamond wheel
  - crushing device
- Loading systems
- Coolant/cleaning systems

Rundschleifqualität
High-standard

Werkstück

Schleifzelle mit eingespanntem Werk

JUWOP/R

bietet neue Wege für das benutzer freundliche Rundschleifen

Erstellen von getesteten NC-Programme nach DIN/ISO mittels grafischem Dialog.

Komplette Werkstückkonstruktion durc Aneinanderfügen einfacher Geometri elemente.

Kontroll-Simulation des erzeugten Schlei ablaufs in Echtzeit.

Integriertes Kollisionserkennungs-Syste

Grafische Erstellung und Simulation d Schleifscheiben-Profilierung.

Technische Daten

Abmessungsbereich

Spitzenhöhe: . . . . . 100 mm
Umlaufdurchmesser: . . . . . max. 80 mm
Einspannlänge: . . . . . max. 150 mm
Schleiflänge: . . . . . max. 150 mm
Werkstückgewicht zwischen Spitzen: . . . . . max. 5 kg

Schleifspindeleinheit

Schleifscheibendurchmesser: . . . . . max. 400 mm
min. 290 mm
Schleifscheibenbreite: . . . . . max. 63 mm
Antriebsleistung: . . . . . 5,5 kW
Umfangsgeschwindigkeit: . . . . . max. 50 m/s
Schleifscheibenanordnung: . . . . . rechts

Maschinendaten

Schleifmittel: . . . . . Korund
Zustellung: . . . . . X-Achse, CNC
Längsbewegung: . . . . . Z-Achse, CNC
Auflösung der Zustellachsen: . . . . . 0,0001 mm
Gewicht der Maschine: . . . . . ca. 4.000 kg
Abmessungen ohne Kühlmittelanlage
(BxTxH): . . . . . 1.400 x 2.850 x 2.000 mm

Technical Data

Workpiece specifications

Center height: . . . . . max. 100 mm
Swing diameter: . . . . . max. 80 mm
Clamping length: . . . . . max. 150 mm
Grinding length: . . . . . max. 150 mm
Workpiece weight between centers: . . . . . max. 5 kg

Wheelhead

Grinding wheel diameter: . . . . . max. 400 mm
min. 290 mm
Grinding wheel width: . . . . . max. 63 mm
Drive power: . . . . . 5,5 kW
Circumferential speed: . . . . . max. 50 m/s
Grinding wheel arrangement: . . . . . to the right

Machine data

Abrasive: . . . . . Corundum
Feed motion: . . . . . X-axis, CNC
Longitudinal motion: . . . . . Z-axis, CNC
Resolution of infeed axes: . . . . . 0,0001 mm
Weight of the machine: . . . . . approx. 4.000 kg
Dimensions without coolant system
(WxDxH): . . . . . 1.400 x 2.850 x 2.000 mm

Layout

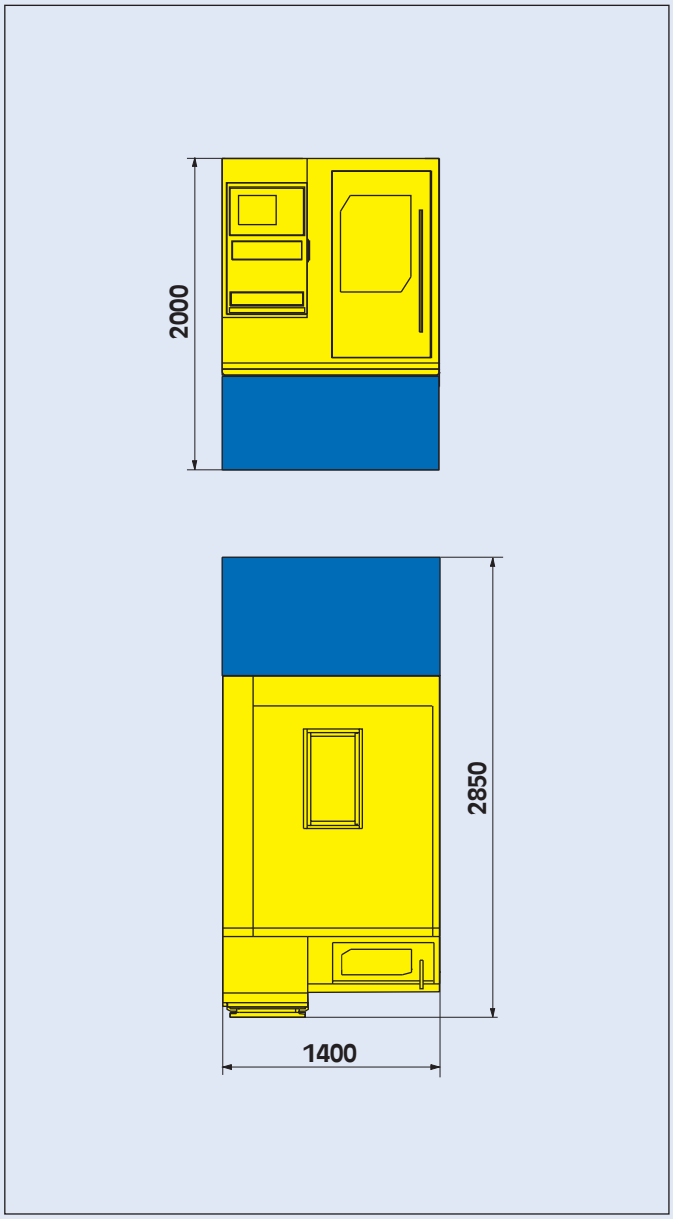

Erwin Junker
Grinding Technology Mělník Ltd.
Sokolovská 68/105
18600 Praha 8 - Karlín
Czech Republic

Phone: +420 2 24 89 06 10
Fax: +420 2 24 81 82 44
E-Mail: info@junker.cz
www.junker-group.com

8.24238 D/E 0805 Änderungen, die dem technischen Fortschritt dienen behalten wir uns vor. Modifications for the sake of technical improvement reserved.

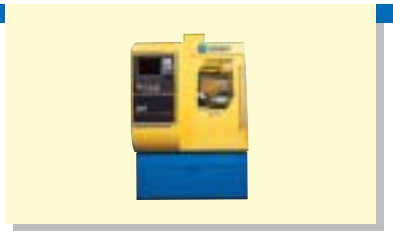

Ein innovatives Maschinenkonzept für flexible Nutzung

Die Rundschleifmaschine EJ 10 ist zum Außenschleifen von zylindrischen Teilen durch Einstech- und Pendelschleifverfahren geeignet. Sie wurde unter Berücksichtigung der aktuellsten schleiftechnischen Erkenntnisse entwickelt.

Erfahrungen im Bereich der präzisen Bearbeitung kleiner Teile, neuste Konstruktionsprinzipien und modernste CNC-Technologien wurden genau auf die Bedürfnisse und Ansprüche des Kunden umgesetzt.

Das wirtschaftliche und flexible Maschinenkonzept erfüllt alle Anforderungen - vor allem im Bereich der Großserienfertigung.

An innovative and flexible machine concept

The cylindrical grinding machine of type EJ 10 is suitable for realizing applications such as O.D. grinding of cylindrical components in plunge-cut and oscillating grinding operations. This machine is a state-of-the-art development based on the latest findings in grinding technology.

Experience in precision grinding of small components, latest design as well as state-of-the-art CNC technology have been set together in order to fulfil customer's needs.

This is an economical and effective machine concept which meets all requirements, especially suitable for applications in large scale production.

Beispiele aus der Praxis / Examples

Optionen / Options

- Mess-Systeme
- Abrichtsysteme:
  - Rotierendes Diamantrad
  - Einrollvorrichtung
- Ladesysteme
- Kühlmittel-/Reinigungssysteme

- Measuring systems
- Dressing systems:
  - rotating diamond wheel
  - crushing device
- Loading systems
- Coolant/cleaning systems

Rundschleifqualität f
High-standard c

Werkstückb

Schleifzelle mit eingespanntem Werkst

JUWOP/R

bietet neue Wege für das benutzerfreundliche Rundschleifen

Erstellen von getesteten NC-Programmen nach DIN/ISO mittels grafischem Dialog.

Komplette Werkstückkonstruktion durch Aneinanderfügen einfacher Geometrieelemente.

Kontroll-Simulation des erzeugten Schleifablaufs in Echtzeit.

Integriertes Kollisionserkennungs-System

Grafische Erstellung und Simulation de Schleifscheiben-Profilierung.

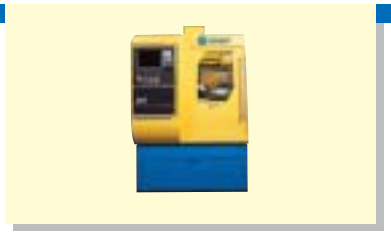

Ein innovatives Maschinenkonzept für flexible Nutzung

Die CNC-Schrägeinstich-Rundschleifmaschine EJ 11 ist zum Außenschleifen von zylindrischen Teilen durch Einstech- und Pendelschleifverfahren geeignet. Sie wurde unter Berücksichtigung der aktuellsten schleiftechnischen Erkenntnisse entwickelt.

Erfahrungen im Bereich der präzisen Bearbeitung kleiner Teile, neuste Konstruktionsprinzipien und modernste CNC-Technologien wurden genau auf die Bedürfnisse und Ansprüche des Kunden umgesetzt.

Das wirtschaftliche und flexible Maschinenkonzept erfüllt alle Anforderungen - vor allem im Bereich der Großserienfertigung.

An innovative and flexible machine concept

The CNC angular infeed O.D. grinding machine of type EJ 11 is suitable for realizing applications such as O.D. grinding of cylindrical components in plunge-cut and oscillating grinding operations. This machine is a state-of-the-art development based on the latest findings in grinding technology.

Experience in precision grinding of small components, latest design as well as state-of-the-art CNC technology have been set together in order to fulfil customer's needs.

This is an economical and effective machine concept which meets all requirements, especially suitable for applications in large scale production.

Optionen / Options

- Mess-Systeme
- Abrichtsysteme:
  - Rotierendes Diamantrad
  - Einrollvorrichtung
- Ladesysteme
- Kühlmittel-/Reinigungs-systeme

- Measuring systems
- Dressing systems:
  - rotating diamond wheel
  - crushing device
- Loading systems
- Coolant /cleaning systems

Rundschleifqualität f
High-standard c

Werkstückbeispiele / Workpi

JUWOP/R

bietet neue Wege für das benutzer-freundliche Rundschleifen

Erstellen von getesteten NC-Programmen nach DIN/ISO mittels grafischem Dialog.

Komplette Werkstückkonstruktion durch Aneinanderfügen einfacher Geometrie-elemente.

Kontroll-Simulation des erzeugten Schleif-ablaufs in Echtzeit.

Integriertes Kollisionserkennungs-System

Grafische Erstellung und Simulation de Schleifscheiben-Profilierung.

JUNKER
partner for precision

Enjoying more value

EJ 29 Silver

Multi-functional OD and ID grinding machine

Enjoying more value ...

EJ 29 silver

More value at no extra costs

The EJ 29 **silver** is an O.D. grinder that can also perform I.D. grinding. And the efficient Fanuc CNC control system guarantees precision and productivity second to none. The EJ 29 is now available as a special model **silver**: with an inside diameter grinding function, extended features and extensive service – all for the price of a standard OD grinding machine.

Multi-functional and flexible

The EJ 29 **silver** is the ideal universal grinding machine for sub-contractors, small-batch producers, and machine manufacturers. For outer and inner diameter grinding in small-scale or single-piece production or in serial operation of larger lots. Even manual grinding is possible using the separate hand wheels to control the X- and Z-axis. The EJ 29 **silver** combines a high degree of flexibility with low operational costs and offers everything that is important for sub-contract grinding:

- Top machining quality
- High productivity
- Minimal idle times
- Ease of handling
- Fast tool changing
- Small space requirements

Workpiece data:

Clamping length:	max. 800 mm
Height of centres:	150 mm
Workpiece weight:	max. 80 kg

s i l v e r

... produce without compromise

EJ 29 silver

At no added costs: the special features

- Seal of quality: every EJ 29 **silver** is inspected by statistical evaluation, documented and given the seal of quality before being shipped by JUNKER.
- 2-year full warranty
- 3 years of preventive inspections incl. free software updates
- Installation incl. 3-day training at the customer's works
- Exclusive EJ 29 **silver** Hotline

Optional accessories

- Approach sensor
- Diameter measurement control
- Length position probe
- Three-jaw chuck
- Magnetic face plate

Its not only the price that makes the difference

- Quick delivery and installation
- Easy instruction; training included
- Rapid component exchange due to modular construction
- "Machine sponsorship" by personal service technician
- Conforms to CE safety regulations

... profit allied to quality

Multi-functional OD and ID grinding machine

One price for the complete program

Elsewhere you have to pay dearly:
the special features of the EJ 29 **silver**.

- Manual or automatic dressing programs with grinding wheel and diamond compensation
- Glass scale on X-axis
- Tailstock with hydraulic drive and park position
- Filter system with magnetic separator
- Separate electronic hand wheels for the X- and Z-axes for manual movement
- Modern CNC control system, type FANUC 21i
- Software with pictograms for pendulum grinding, plunge-cut grinding, shoulder grinding, internal grinding, angular infeed grinding
- High drive performance and posi-stop on workhead (36 Nm)
- High-performance grinding spindle
- Flat prism guide ways with TURCITE coating
- Digital drives with absolute measuring system on every axis
- Setting of table: + 8,5° / - 3,5°

silver

Technical data EJ 29 silver

Lateral axis (X-axis)	Max. distance: 350 mm Speed: 0.001 – 10 m/min Resolution: 0.001 mm
Longitudinal axis (Z-axis)	Max. distance: 1000 mm Speed: 0.001 – 12 m/min Resolution: 0.001 mm Max. Swivel range: +8.5° / -3.5°
Wheelhead for OD grinding	Drive rating: 7.5 kW Grinding wheel diameter: 290 – 400 mm Grinding wheel width: 63 mm Peripheral speed: 45 m/s Swivel area angular infeed grinding: 0 – 15°
Internal grinding equipment	Drive rating: 1.5 kW Locating bore: Ø 80 mm Number of inner grinding spindles: 1 version
Workhead	Speed range: 0 – 1000 Receiving taper: MK 5 Spindle torque: 36 Nm Swivel range: 0 – 90°
Tailstock	Mounted on grinding table, manually adjustable Center sleeve stroke: 30 mm, hydraulic Taper mount: MK 4
Guaranteed work precision	Straightness of the surface line: 0.001/100
Power connection	Total connection value: 20 kVA max. permitted voltage fluctuation: +/- 10 % according to EN 60204-1 max. permitted frequency fluctuation: +/- 1 %
Size	Weight (basic version): 5,000 kg Length x width x height: 3340 x 2000 x 2050 mm

Erwin Junker
Maschinenfabrik GmbH
Junkerstraße 2
77787 Nordrach
Germany

Phone: +49 (0)7838 84-0
Fax: +49 (0)7838 84-302
E-Mail: ej29silver@junker.de
www.junker-group.com

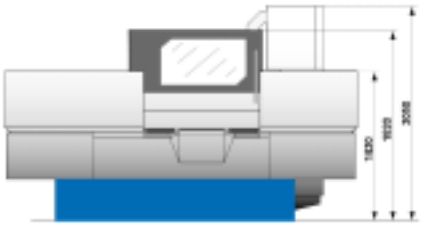

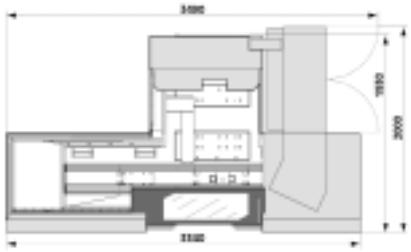

8.28941 E 0705 We reserve the right to make changes that serve technical advancement. www.marschner-kuehn.de

Technische Daten

Abmessungsbereich

Spitzenhöhe: . . . . . 150 mm
Umlaufdurchmesser: . . . . . 290 mm
Einspannlänge: . . . . . max. 800 mm
Schleiflänge: . . . . . max. 800 mm
Werkstückgewicht zwischen Spitzen: . . . . . max. 80 kg

Schleifspindeleinheit

Schleifscheibendurchmesser: . . . . . max. 400 mm
min. 290 mm
Schleifscheibenbreite: . . . . . max. 63 mm
Antriebsleistung: . . . . . 7,5 kW
Umfangsgeschwindigkeit: . . . . . max. 45 m/s
Schleifscheibenanordnung: . . . . . links

Maschinendaten

Schleifmittel: . . . . . Korund
Zustellung: . . . . . X-Achse, CNC
Längsbewegung: . . . . . Z-Achse, CNC
Auflösung der Zustellachsen: . . . . . 0,0001 mm
Gewicht der Maschine: . . . . . ca. 7.000 kg
Abmessungen ohne Kühlmittel-Anlage
(BxTxH): . . . . . 3.550 x 2.850 x 2.100 mm

Technical Data

Workpiece specifications

Center height: . . . . . max. 150 mm
Swing diameter: . . . . . max. 290 mm
Clamping length: . . . . . max. 800 mm
Grinding length: . . . . . max. 800 mm
Workpiece weight between centers: . . . . . max. 80 kg

Wheelhead

Grinding wheel diameter: . . . . . max. 400 mm
min. 290 mm
Grinding wheel width: . . . . . max. 63 mm
Drive power: . . . . . 7,5 kW
Circumferential speed: . . . . . max. 45 m/s
Grinding wheel arrangement: . . . . . to the left

Machine data

Abrasive: . . . . . Corundum
Feed motion: . . . . . X-axis, CNC
Longitudinal motion: . . . . . Z-axis, CNC
Resolution of infeed axes: . . . . . 0,0001 mm
Weight of the machine: . . . . . approx. 7.000 kg
Dimensions without coolant system
(WxDxH): . . . . . 3.550 x 2.850 x 2.100 mm

Layout

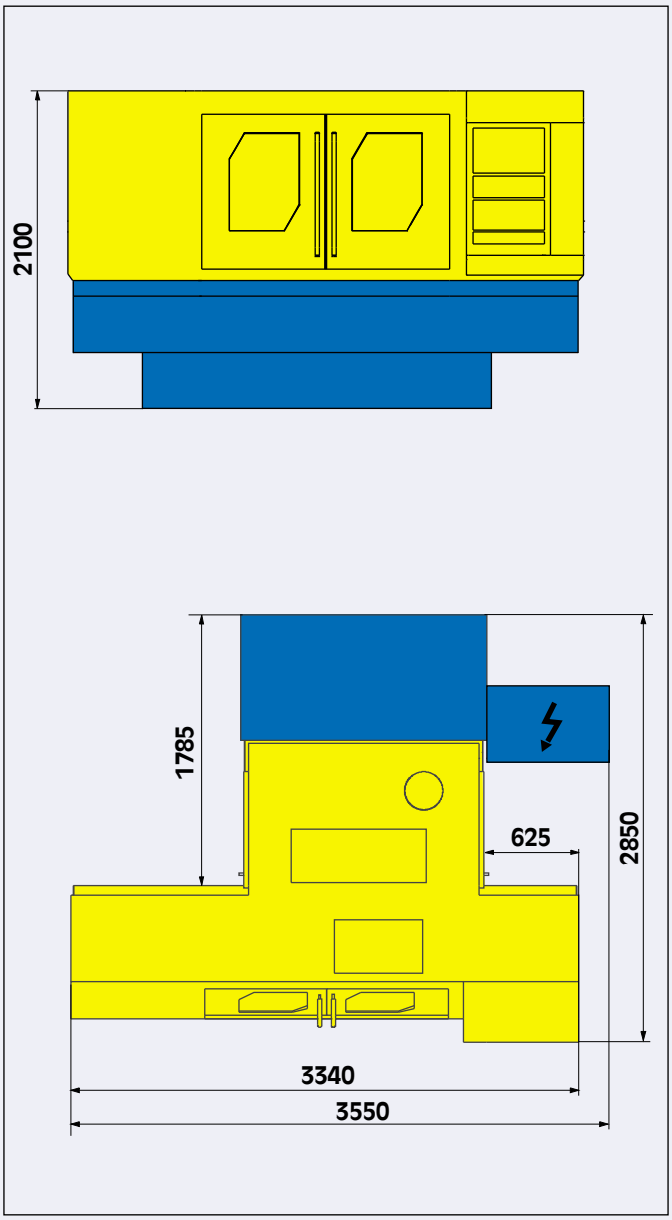

Erwin Junker
Grinding Technology Mělník Ltd.
Sokolovská 68/105
18600 Praha 8 - Karlín
Czech Republic

Phone: +420 2 24 89 06 10
Fax: +420 2 24 81 82 44
E-Mail: info@junker.cz
www.junker-group.com

8.20565 D/E 0902 Änderungen, die dem technischen Fortschritt dienen behalten wir uns vor. Modifications for the sake of technical improvement reserved.

Ein innovatives Maschinenkonzept für flexible Nutzung

Die CNC-Außenrundschleifmaschine EJ 30 wurde unter Berücksichtigung der aktuellsten schleiftechnischen Erkenntnisse entwickelt.

Rundschleiferfahrungen aus der Praxis, neueste Konstruktionsprinzipien und modernste CNC-Technologien wurden genau auf die Bedürfnisse des Schleiffachmanns umgesetzt.

Ein wirtschaftliches, flexibles Maschinenkonzept, das jede Schleifaufgabe, ob Einzel- oder Serienfertigung, erfüllt.

An innovative and flexible machine concept

The CNC O.D. grinding machine EJ 30 is the state-of-the-art machine based on the recent findings in the field of grinding technology.

Experience in cylindrical grinding, latest construction and state-of-the-art CNC technology were combined in order to meet the customers' requirements.

An efficient and flexible machine concept for any grinding application suitable for small or large scale production.

Beispiele aus der Praxis / Examples

Optionen / Options

- Mess-Systeme
- Abrichtsysteme:
  - Rotierendes Diamantrad
  - Einrollvorrichtung
- Ladesysteme
- Kühlmittel-/Reinigungssysteme

- Measuring systems
- Dressing systems:
  - rotating diamond wheel
  - crushing device
- Loading systems
- Coolant /cleaning systems

Rundschleifqualität f
High-standard c

Werkstückbeispiele / Workpiece samples

Schleifzelle mit eingespanntem Werkstück / Gr

JUWOP/R

bietet neue Wege für das benutzer-
freundliche Rundschleifen

Erstellen von getesteten NC-Programme
nach DIN/ISO mittels grafischem Dialog.

Komplette Werkstückkonstruktion durc
Aneinanderfügen einfacher Geometrie
elemente.

Kontroll-Simulation des erzeugten Schleif
ablaufs in Echtzeit.

Integriertes Kollisionserkennungs-System

Grafische Erstellung und Simulation de
Schleifscheiben-Profilierung.

Technische Daten

Abmessungsbereich

Spitzenhöhe: . . . . . 150 mm
Umlaufdurchmesser: . . . . . 290 mm
Einspannlänge: . . . . . max. 800 mm
Schleiflänge: . . . . . max. 570 mm
Werkstückgewicht zwischen Spitzen: . . . . . max. 80 kg

Schleifspindeleinheit

Schleifscheibendurchmesser: . . . . . max. 500 mm
min. 370 mm
Schleifscheibenbreite: . . . . . max. 63 mm
Antriebsleistung: . . . . . 7,5 kW
Schwenkbereich: . . . . . +10°/-30°
Umfangsgeschwindigkeit: . . . . . max. 45 m/s
Schleifscheibenanordnung: . . . . . rechts

Maschinendaten

Schleifmittel: . . . . . Korund
Zustellung: . . . . . X-Achse, CNC
Längsbewegung: . . . . . Z-Achse, CNC
Auflösung der Zustellachsen: . . . . . 0,0001 mm
Gewicht der Maschine: . . . . . ca. 7.000 kg
Abmessungen ohne Kühlmittel-Anlage
(BxTxH): . . . . . 3.550 x 2.850 x 2.100 mm

Technical Data

Workpiece specifications

Center height: . . . . . max. 150 mm
Swing diameter: . . . . . max. 290 mm
Clamping length: . . . . . max. 800 mm
Grinding length: . . . . . max. 570 mm
Workpiece weight between centers: . . . . . max. 80 kg

Wheelhead

Grinding wheel diameter: . . . . . max. 500 mm
min. 370 mm
Grinding wheel width: . . . . . max. 63 mm
Drive power: . . . . . 7,5 kW
Swivel angle: . . . . . +10°/-30°
Circumferential speed: . . . . . max. 45 m/s
Grinding wheel arrangement: . . . . . to the right

Machine data

Abrasive: . . . . . Corundum
Feed motion: . . . . . X-axis, CNC
Longitudinal motion: . . . . . Z-axis, CNC
Resolution of infeed axes: . . . . . 0,0001 mm
Weight of the machine: . . . . . approx. 7.000 kg
Dimensions without coolant system
(WxDxH): . . . . . 3.550 x 2.850 x 2.100 mm

Layout

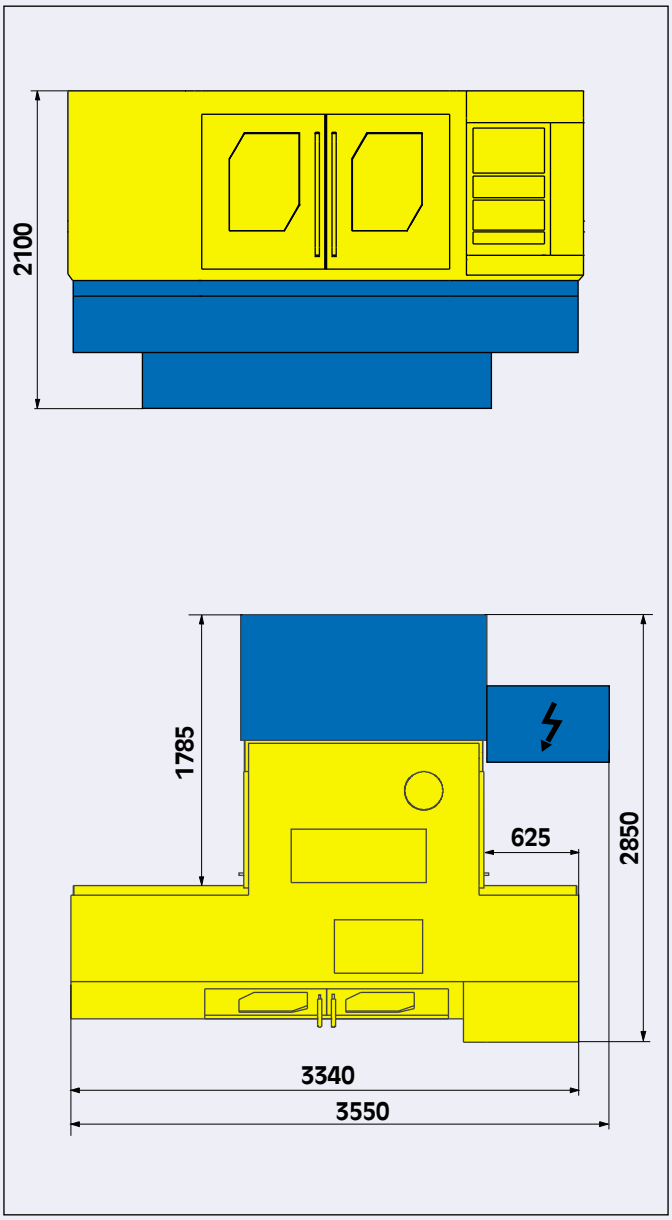

Erwin Junker
Grinding Technology Mělník Ltd.
Sokolovská 68/105
18600 Praha 8 - Karlín
Czech Republic

Phone: +420 2 24 89 06 10
Fax: +420 2 24 81 82 44
E-Mail: info@junker.cz
www.junker-group.com

8.21961 D/E 0902 Änderungen, die dem technischen Fortschritt dienen behalten wir uns vor. Modifications for the sake of technical improvement reserved.

Ein innovatives Maschinenkonzept für flexible Nutzung

Die CNC-Schrägeinstich-Außenrundschleifmaschine EJ 31 wurde unter Berücksichtigung der aktuellsten schleiftechnischen Erkenntnisse entwickelt.

Rundschleiferfahrungen aus der Praxis, neueste Konstruktionsprinzipien und modernste CNC-Technologien wurden genau auf die Bedürfnisse des Schleiffachmanns umgesetzt.

Ein wirtschaftliches, flexibles Maschinenkonzept, das jede Schleifaufgabe, ob Einzel- oder Serienfertigung, erfüllt.

An innovative and flexible machine concept

The CNC angular infeed O.D. grinding machine EJ 31 is the state-of-the-art machine based on the recent findings in the field of grinding technology.

Experience in cylindrical grinding, latest construction and state-of-the-art CNC technology were combined in order to meet the customers' requirements.

An efficient and flexible machine concept for any grinding application suitable for small or large scale production.

Beispiele aus der Praxis / Examples

Optionen / Options

- Mess-Systeme
- Abrichtsysteme:
  - Rotierendes Diamantrad
  - Einrollvorrichtung
- Ladesysteme
- Kühlmittel-/Reinigungssysteme

- Measuring systems
- Dressing systems:
  - rotating diamond wheel
  - crushing device
- Loading systems
- Coolant /cleaning systems

Rundschleifqualität f
High-standard c

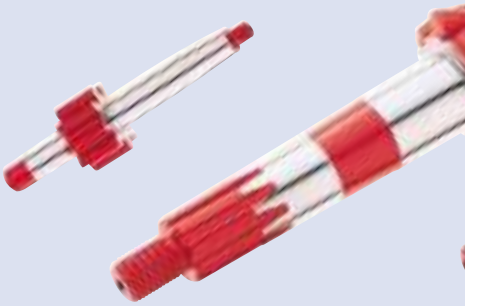

Werkstückbeispiele / Workpiece samples

Schleifzelle mit eingespanntem Werkstück / Gr

JUWOP/R

bietet neue Wege für das benutzer-
freundliche Rundschleifen

Erstellen von getesteten NC-Programme
nach DIN/ISO mittels grafischem Dialog.

Komplette Werkstückkonstruktion durc
Aneinanderfügen einfacher Geometrie
elemente.

Kontroll-Simulation des erzeugten Schleif
ablaufs in Echtzeit.

Integriertes Kollisionserkennungs-System

Grafische Erstellung und Simulation de
Schleifscheiben-Profilierung.

Technische Daten

Abmessungsbereich

Spitzenhöhe: . . . . . 205 mm
Umlaufdurchmesser: . . . . . 400 mm
Einspannlänge: . . . . . max. 1.300 mm
Schleiflänge: . . . . . max. 1.050 mm
Werkstückgewicht zwischen Spitzen: . . . . . max. 150 kg

Schleifspindeleinheit

Schleifscheibendurchmesser: . . . . . max. 600 mm
min. 450 mm
Schleifscheibenbreite (Standard): . . . . . max. 125 mm
Schleifscheibenbreite (Option): . . . . . max. 200 mm
Antriebsleistung (Standard): . . . . . 22 kW
Antriebsleistung (Option): . . . . . 30 kW
Umfangsgeschwindigkeit: . . . . . max. 45 m/s
Schleifscheibenanordnung: . . . . . rechts

Maschinendaten

Schleifmittel: . . . . . Korund
Zustellung: . . . . . X-Achse, CNC
Längsbewegung: . . . . . Z-Achse, CNC
Auflösung der Zustellachsen: . . . . . 0,0001 mm
Gewicht der Maschine: . . . . . ca. 11.000 kg
Abmessungen ohne Kühlmittel-Anlage
(BxTxH): . . . . . ca. 4.500 x 3.310 x 2.330 mm

Technical Data

Workpiece specifications

Center height: . . . . . max. 205 mm
Swing diameter: . . . . . max. 400 mm
Clamping length: . . . . . max. 1.300 mm
Grinding length: . . . . . max. 1.050 mm
Workpiece weight between centers: . . . . . max. 150 kg

Wheelhead

Grinding wheel diameter: . . . . . max. 600 mm
min. 450 mm
Grinding wheel width (standard): . . . . . max. 125 mm
Grinding wheel width (option): . . . . . max. 200 mm
Drive power (standard): . . . . . 22 kW
Drive power (option): . . . . . 30 kW
Circumferential speed: . . . . . max. 45 m/s
Grinding wheel arrangement: . . . . . to the right

Machine data

Abrasive: . . . . . Corundum
Feed motion: . . . . . X-axis, CNC
Longitudinal motion: . . . . . Z-axis, CNC
Resolution of infeed axes: . . . . . 0,0001 mm
Weight of the machine: . . . . . approx. 11.000 kg
Dimensions without coolant system
(WxDxH): . . . . . approx. 4.500 x 3.310 x 2.330 mm

Layout

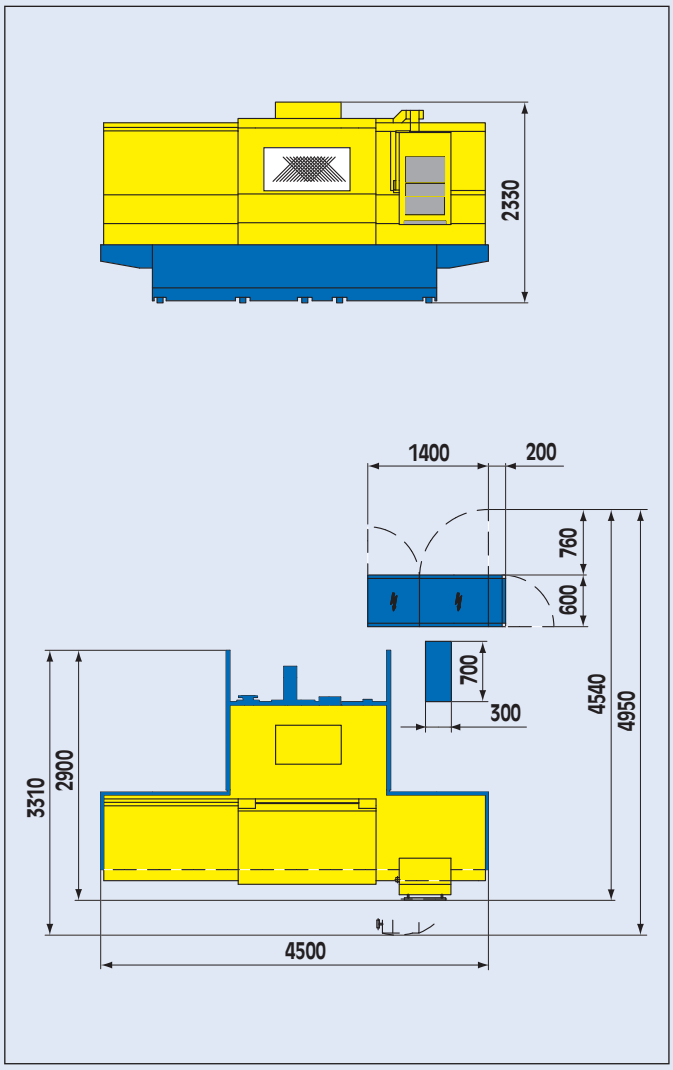

Erwin Junker
Grinding Technology Mělník Ltd.
Sokolovská 68/105
18600 Praha 8 - Karlín
Czech Republic

Phone: +420 2 24 89 06 10
Fax: +420 2 24 81 82 44
E-Mail: info@junker.cz
www.junker-group.com

8.09432 D/E 0805
Änderungen, die dem technischen Fortschritt dienen behalten wir uns vor. Modifications for the sake of technical improvement reserved.

Ein innovatives Maschinenkonzept für flexible Nutzung

Die CNC-Außenrundschleifmaschine EJ 50 wurde unter Berücksichtigung der aktuellsten schleiftechnischen Erkenntnisse entwickelt.

Rundschleiferfahrungen aus der Praxis, neueste Konstruktionsprinzipien und modernste CNC-Technologien wurden genau auf die Bedürfnisse des Schleiffachmanns umgesetzt.

Ein wirtschaftliches, flexibles Maschinenkonzept, das jede Schleifaufgabe, ob Einzel- oder Serienfertigung, erfüllt.

An innovative and flexible machine concept

The CNC O.D. grinding machine EJ 50 is the state-of-the-art machine based on the recent findings in the field of grinding technology.

Experience in cylindrical grinding, latest construction and state-of-the-art CNC technology were combined in order to meet the customers' requirements.

An efficient and flexible machine concept for any grinding application suitable for small or large scale production.

Schleifbeispiele / Possible grinding operations

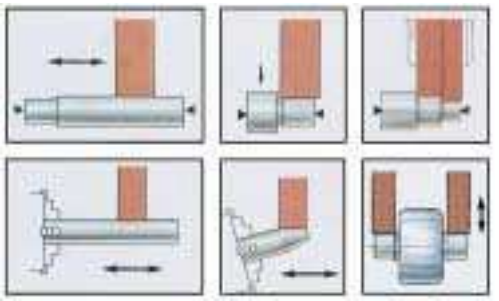

Optionen / Options

- Mess-Systeme
- Abrichtsysteme:
  - Rotierendes Diamantrad
  - Einrollvorrichtung
- Ladesysteme
- Kühlmittel-/Reinigungssysteme

- Measuring systems
- Dressing systems:
  - rotating diamond wheel
  - crushing device
- Loading systems
- Coolant/cleaning systems

Rundschleifqualität f
High-standard c

Werkstückbeispiele / Workpiece samples

Schleifzelle mit eingespanntem Werkstück / Gri

JUWOP/R

bietet neue Wege für das benutzerfreundliche Rundschleifen

Erstellen von getesteten NC-Programmen nach DIN/ISO mittels grafischem Dialog.

Komplette Werkstückkonstruktion durch Aneinanderfügen einfacher Geometrieelemente.

Kontroll-Simulation des erzeugten Schleifablaufs in Echtzeit.

Integriertes Kollisionserkennungs-System

Grafische Erstellung und Simulation de Schleifscheiben-Profilierung.

Technische Daten

Abmessungsbereich

Spitzenhöhe: . . . . . 205 mm
Umlaufdurchmesser: . . . . . 400 mm
Einspannlänge: . . . . . max. 1.300 mm
Schleiflänge: . . . . . max. 1.050 mm
Werkstückgewicht zwischen Spitzen: . . . . . max. 150 kg

Schleifspindeleinheit

Schleifscheibendurchmesser: . . . . . max. 600 mm
min. 450 mm
Schleifscheibenbreite (Standard): . . . . . 125 mm
Schleifscheibenbreite (Option): . . . . . 200 mm
Antriebsleistung (Standard): . . . . . 22 kW
Antriebsleistung (Option): . . . . . 30 kW
Schwenkbereich: . . . . . 30°
Umfangsgeschwindigkeit: . . . . . max. 45 m/s
Schleifscheibenanordnung: . . . . . rechts

Maschinendaten

Schleifmittel: . . . . . Korund
Zustellung: . . . . . X-Achse, CNC
Längsbewegung: . . . . . Z-Achse, CNC
Auflösung der Zustellachsen: . . . . . 0,0001 mm
Gewicht der Maschine: . . . . . ca. 11.000 kg
Abmessungen ohne Kühlmittel-Anlage
(BxTxH): . . . . . ca. 4.500 x 3.310 x 2.330 mm

Technical Data

Workpiece specifications

Center height: . . . . . max. 205 mm
Swing diameter: . . . . . max. 400 mm
Clamping length: . . . . . max. 1.300 mm
Grinding length: . . . . . max. 1.050 mm
Workpiece weight between centers: . . . . . max. 150 kg

Wheelhead

Grinding wheel diameter: . . . . . max. 600 mm
min. 450 mm
Grinding wheel width (standard): . . . . . max. 125 mm
Grinding wheel width (option): . . . . . max. 200 mm
Drive power (standard): . . . . . 22 kW
Drive power (option): . . . . . 30 kW
Swivel angle: . . . . . 30°
Circumferential speed: . . . . . max. 45 m/s
Grinding wheel arrangement: . . . . . to the right

Machine data

Abrasive: . . . . . Corundum
Feed motion: . . . . . X-axis, CNC
Longitudinal motion: . . . . . Z-axis, CNC
Resolution of infeed axes: . . . . . 0,0001 mm
Weight of the machine: . . . . . approx. 11.000 kg
Dimensions without coolant system
(WxDxH): . . . . . approx. 4.500 x 3.310 x 2.330 mm

Layout

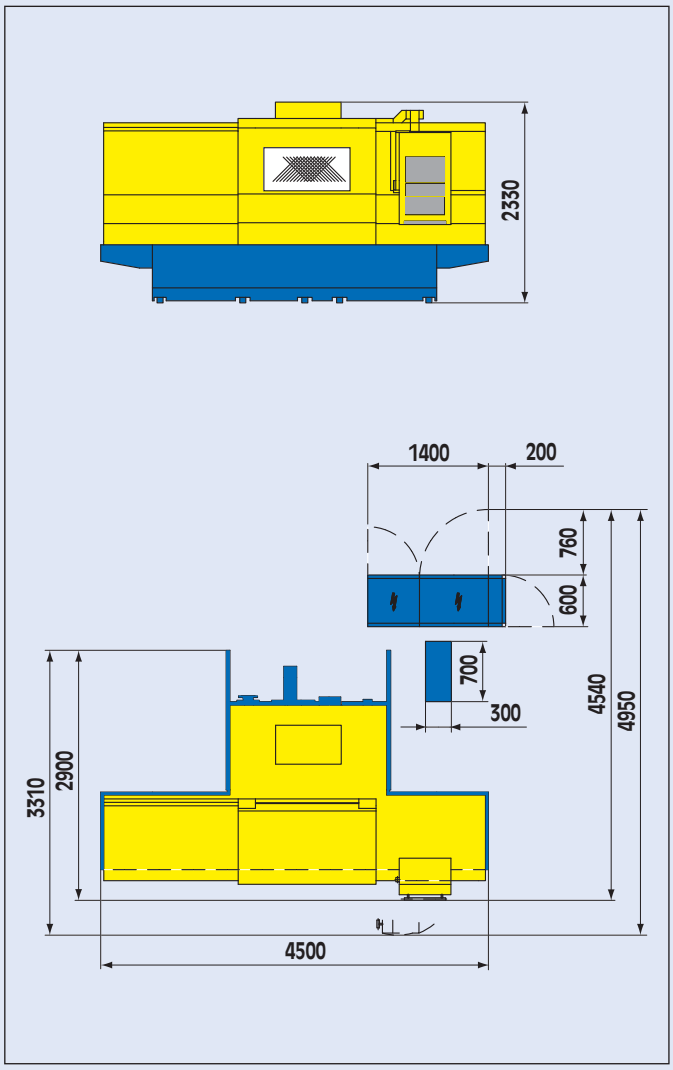

Erwin Junker
Grinding Technology Mělník Ltd.
Sokolovská 68/105
18600 Praha 8 - Karlín
Czech Republic

Phone: +420 2 24 89 06 10
Fax: +420 2 24 81 82 44
E-Mail: info@junker.cz
www.junker-group.com

Änderungen, die dem technischen Fortschritt dienen behalten wir uns vor. Modifications for the sake of technical improvement reserved.

8.09433 D/E 0805

Ein innovatives Maschinenkonzept für flexible Nutzung

Die CNC-Schrägeinstich-Außenrundschleifmaschine EJ 51 wurde unter Berücksichtigung der aktuellsten schleiftechnischen Erkenntnisse entwickelt.

Rundschleiferfahrungen aus der Praxis, neueste Konstruktionsprinzipien und modernste CNC-Technologien wurden genau auf die Bedürfnisse des Schleiffachmanns umgesetzt.

Ein wirtschaftliches, flexibles Maschinenkonzept, das jede Schleifaufgabe, ob Einzel- oder Serienfertigung, erfüllt.

An innovative and flexible machine concept

The CNC angular infeed O.D. grinding machine EJ 51 is the state-of-the-art machine based on the recent findings in the field of grinding technology.

Experience in cylindrical grinding, latest construction and state-of-the-art CNC technology were combined in order to meet the customers' requirements.

An efficient and flexible machine concept for any grinding application suitable for small or large scale production.

Beispiele aus der Praxis / Examples

Optionen / Options

- Mess-Systeme
- Abrichtsysteme:
  - Rotierendes Diamantrad
  - Einrollvorrichtung
- Ladesysteme
- Kühlmittel-/Reinigungssysteme

- Measuring systems
- Dressing systems:
  - rotating diamond wheel
  - crushing device
- Loading systems
- Coolant /cleaning systems

Rundschleifqualität f
High-standard cy

Werkstückbeispiele / Workpiece samples

Schleifzelle mit eingespanntem Werkstück / Grin

JUWOP/R

bietet neue Wege für das benutzerfreundliche Rundschleifen

Erstellen von getesteten NC-Programmen nach DIN/ISO mittels grafischem Dialog.

Komplette Werkstückkonstruktion durch Aneinanderfügen einfacher Geometrieelemente.

Kontroll-Simulation des erzeugten Schleifablaufs in Echtzeit.

Integriertes Kollisionserkennungs-System.

Grafische Erstellung und Simulation der Schleifscheiben-Profilierung.

JUNKER
partner for precision

FLUTEMAT

Highly-flexible flute grinding

FLUTEMAT

Extremely precise and economical

Productivity up, costs down

"4 in 1" – previously, four different JUNKER machines were needed for grinding straight or spiral flutes and spiral face inclinations on cutting tools. Today all this can be done with just one machine: FLUTEMAT.
For JUNKER customers that means huge savings in terms of investment, running costs, personnel and maintenance costs.

The following cutting tools (diam. 2-16 mm) made from HSS can be processed with the FLUTEMAT:

- Tap drills
- Milling cutters
- Reamers

Built for precision

The precision tools are machined from solid blanks. The tools are mounted either with collet chuck and tailstock centre or with spring-loaded square insert and tailstock centre. Due to the fixed stop on the tailstock, an identical flute starting to the square is always guaranteed.

Technology to rely on

The grinding is performed with corundum grinding wheels. Up to 2 grinding wheels can be mounted on the grinding spindle simultaneously. The height and horizontal adjustment, as well as the axial infeed of the grinding wheels and the swivel movements and workpiece drive, are CNC-controlled.

Impressive: the CNC-controlled dressing system

The integrated dressing system (rotating dressing diamond wheel) is impressive for small and mass series since the corundum grinding wheel can be profiled or dressed quickly and precisely. Through a special alignment of the dressing diamond wheel directly behind the grinding spindle, the grinding wheel can be dressed during the grinding or loading cycle - because ‚time is money'.

The central JUNKER CNC control concept

All entries and information pass through the Erwin Junker Operator Panel EJ-OP platform, a modern and high-performance controller with colour monitor and integrated PC.

JUWOP/W software

The interaction of the machine axes and the controller in combination with the software package JUWOP/W offers the best prerequisites for optimum-precision machining of tools.

- Programming of tools and grinding wheels
- Definition of machining processes on tool
- Calculation of grinding wheel profiles
- Simulation in 3D (JUWOP/VG)

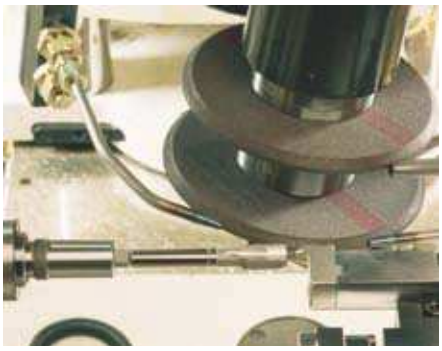

Grinding of the spiral face inclination

Grinding of straight flutes

Open interface for automation

The new JUNKER Evolution² machine concept now also featured in the TOOLTEC division:
Higher availability and reduced operating costs thanks to the JUNKER platform strategy.

Your advantages in the field of automation:

- The open interface permits free selection of the automation system
- Optional application of the JUNKER system or of any other non-JUNKER makes
- Universally compatible internal JUNKER loading system (keyhole solution)
- Possible transport systems: pallets, cassettes, JUNKER magazine discs

Technical data

Dimensions (without accessories)

Width x depth x height: 3,460 x 2,665 x 2,050 mm

Machine weight: approx. 8,000 kg

Workpiece data	
Workpiece diameter:	2 - 16 mm
Workpiece length:	40 - 250 mm
Grinding length:	max. 200 mm
Spiral offset right / left:	programmable
Grinding spindle swivel max.:	53° left / 60° right
Division, conicality:	programmable
The CNC axes	
Horizontal infeed:	X-axis
Vertical infeed:	Y-axis
Axial feed:	Z-axis
Grinding spindle swivel:	A-axis
Workpiece rotary motion:	C-axis
Dressing device, horizontal movement:	X2-axis
Dressing device, vertical movement:	Y2-axis
Grinding data	
Grinding type:	High-speed grinding
Drive rating of grinding spindles:	11 kW
Abrasive:	Corundum
Number of grinding wheels:	max. 2
Diameter of grinding wheel min. / max.:	120 mm / 200 mm
Bore diameter, grinding wheel:	50,8 mm
Width per grinding wheel:	max. 16 mm
Width of grinding wheel package:	max. 90 mm
Peripheral speed of grinding wheel:	programmable per grinding operation

JUNKER
partner for precision

EUROPE

JUNKER Maschinen

Erwin Junker
Maschinenfabrik GmbH
Junkerstraße 2
77787 Nordrach
Germany

Phone: +49 (0)7838 84-0
Fax: +49 (0)7838 84-302
E-Mail: info@junker.de
www.junker-group.com

JUNKER Grinding Technology

Erwin Junker
Grinding Technology Mělník Ltd.
Sokolovská 68/105
18600 Praha 8-Karlín
Czech Republic

Phone: +420 2 24890610
Fax: +420 2 24818244
E-Mail: info@junker.cz
www.junker-group.com

JUNKER BSH Machines

BSH Holice Ltd.
Pardubická 332
53413 Holice
Czech Republic

Phone: +420 466 003111
Fax: +420 466 682149
E-Mail: info@junker.cz
www.junker-group.com

EUROPE

JUNKER Machines Outils

JUNKER France
13 rue Camille-Desmoulins
92441 Issy Les Moulineaux Cedex
France

Phone: +33 (0)1 58042781
Fax: +33 (0)1 58042300
E-Mail: info@junker-france.com
www.junker-group.com

JUNKER Machine Tools

Junker Machine Tools &
Technology (UK) Ltd.
Hadleigh House
32 Sefton Road, Fulwood Park
Sheffield S10 3TP
U.K.

Phone: +44 (0)114 2303453
Fax: +44 (0)114 2309382
E-Mail: info@junker-group.co.uk
www.junker-group.com

NORTH AMERICA

ERWIN JUNKER
High Performance Grinding Systems

Erwin Junker
Machinery Inc.
1524 Davis Road
Elgin, IL 60123
USA

Phone: +1 847 488 0406
Fax: +1 847 488 0436
E-Mail: info@junker-usa.com
www.junker-usa.com

ASIA

JUNKER Maschinen

Erwin Junker Maschinenfabrik GmbH
Shanghai Representative Office
Rm. G. H, 11 Floor, North Gate Plaza
No.99 Tianmu Road West
Shanghai 200070
P.R. China

Phone: +86 (0)21 63806911
Fax: +86 (0)21 63806955
E-Mail: info@junker.com.cn
www.junker.com.cn

JUNKER Maschinen

Erwin Junker Maschinenfabrik GmbH
Beijing Representative Office
Rm. 1606 Liye Building
No.71 Majiapu Road East, Fengtai Dist.
Beijing 100068
P.R. China

Phone: +86 (0)10 51165066
Fax: +86 (0)10 51165022
E-Mail: info@junker.com.cn
www.junker.com.cn

We reserve the right to make changes that serve technical progress.

8.31621 E 0906

Added value creates freedom

think silver

External and internal cylindrical grinding machine **silver**

Performance. Service. Reliability.

GRINDOR

Added value creates freedom

New brand, successful product

GRINDOR is new. Created with the objective of becoming the grinding machine brand for single part and small volume part manufactures, from the 2-person job shop to the automobile manufacturer to the automotive pants supplier. GRINDOR meets the market demand, provides optimum service with an outstanding price/for performance.

The universal **silver** cylindrical grinding machine presents a new look and has already been introduced successfully in the market by JUNKER. Many satisfied customers in both small and large companies have proof that a grinding machine with today's technology, that is easy to operate and change over, can be purchased at a very attractive price.

Performance. Service. Reliability.

New brand,

well-known reliability

JUNKER is well known for its reputation for application expertise and quality in the Automotive/Production and TOOLTEC business markets. GRINDOR customers will benefit from the reliability and stability of a world wide leading company in the area of grinding technology.

GRINDOR is a partner for its customers who know exactly what they need-short delivery time and fast service. GRINDOR's objective is to provide a high value grinding machine that is right for both the small job shop owner and large companies who know what they want – a machine that delivers a high ROI backed by a strong partner, JUNKER.

GRINDOR – A BRAND OF JUNKER

GRINDOR

think silver

GRINDOR silver: perfect for the grinding of single parts and small lots. This multifunctional external and internal cylindrical grinding machine provides precision and performance at world class levels and comes equipped with many factory installed features which are only available at added cost on competitive machines.

think quality

Cylindrical grinding without compromisses

Your standard for quality and reliability: an all purpose machine concept with external and internal cylindrical grinding functionality. The powerful FANUC CNC controller ensures precision and performance.

think easy

Ease of operation

Whether a job shop, a small lot size manufacturer or machine manufacturer, you will benefit from rapid familiarization, ease of operation and rapid changeover. Even manual grinding is possible with the separate electronic hand wheels.

think complete

Ideal configuration direct from the factory

The base price of every **silver** includes a glass scale on the X-axis and a coolant unit with paper band filter and magnetic separator. And every customer can customise his **silver** to his needs thanks to the many options and available accessories.

think silver

Standard equipment

- Internal grinding unit
- Up to date dressing program
- Glass scale on the X-axis
- Hydraulically operated tailstock
- Filter unit with magnetic separator
- Electronic hand wheels for manual operation
- Modern CNC controller, type FANUC 21i
- User-friendly software with pictograms
- High horse power workhead
- High performance grinding spindle
- Flat prism guideways with TURCITE® covering
- Digital drives with absolute measurement system
- Table adjustment: +8.5° / -3.5°

Modern and precise: the CNC controller

- Fanuc 21i with 9" color screen
- Digital, robust designed axis drives
- Very precise absolute measuring system on all CNC axes
- Teleservice connection (option)

Options and accessories

- Approach sensors/balancing systems
- Diameter measuring systems
- Glass scale on the Z-axis
- Longitudinal positioning device
- Air filtering unit with extraction hood
- Frequency controlled internal grinding spindle (on request)

Easy and logical: machine operation and programming

- New software with ergonomically designed data entry screens
- Comprehensive help graphics with pictograms
- Graphic support for data entry
- Integrated help functions
- Minimal data entry for manual grinding
- DIN/ISO grinding cycles can be mixed

GRINDOR

Workhead

has a heavy duty drive (26.6 ft-pounds), with optimum sealing, and defined stop position.

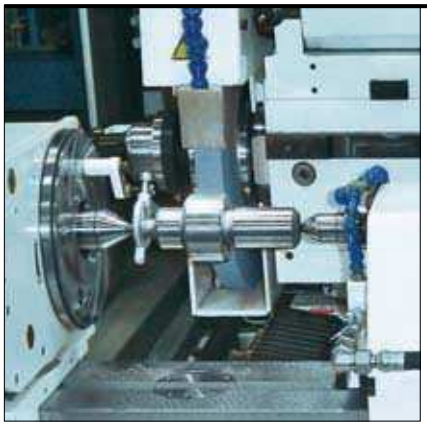

Optimum ease of use

allows easy access to all machine components

Electronic hand wheels

for the X-axis and Z-axis allow for manual grinding

Available as an option

an air/fume extraction hood and/or air filtering unit

Technical data

Workpiece data	· Clamping length: max. 800 mm (31.5 inches) · Centre height: 150 mm (5.9 inches) · Workpiece weight: max. 80 kg (176.4 pounds)
Lateral axis (X-axis)	· Max. travel: 350 mm (13.8 inches) · Speed: 0.001 - 10 m/min (0.0394 - 394 in/min) · Resolution: 0.0001 mm (0.000004 inches)
Longitudinal axis (Z-axis)	· Max. travel: 1000 mm (39.4 inches) · Speed: 0.001 - 12 m/min (0.0394 - 472.8 inches) · Resolution: 0.0001 mm (0.000004 inches)
Outside wheelhead	· Max. swivel range: +8.5°/-3.5° · Drive power: 7.5 kW (10 hp) · Grinding wheel diameter: 400 - 290 mm (11.4 - 15.8 inches) · Grinding wheel width: max. 63 mm (2.5 inches) · Circumferential speed: 45 m/s (8,858 sur ft./min) · Swivel range angular infeed grinding: 0 – 15°
Internal grinding device	· Drive power: 1.5 kW (2 hp) · Locating bore: Ø 80 mm (3.2 inches) · 1 internal grinding spindle 25,000 rpm
Workhead	· Speed range: 0 - 1000 ppm · Taper hole: MK 5 (Morse taper #5) · Spindle torque: 36 Nm (26.6 ft-pounds) · Swivelling range: 0 - 90°
Tailstock	· Mounted on grinding table, manually adjustable · Sleeve hub: 30 mm (1.2 inches), hydraulic · Taper hole: MK 4 (Morse taper #4)
Guaranteed accuracy **Connection values**	· Straightness of the slope: 0.001/100 (0.000004/3.9 inches) · Total connection value: 20 kVA · Max. permissible voltage fluctuation: +/- 10% according to EN 60204-1 · Max. permissible frequency fluctuation: +/- 1%
Dimensions	· Length x Width x Height: 3,340 x 2,000 x 2,050 mm (131.5 x 78.7 x 80.7 inches)
Weight	· Base version 5,000 kg (11,023 pounds)

Dealer information:

Marschner+Kühn

We reserve the right to make changes that serve technical progress.

8.31663 E 0607

Contact office in Czech Republic:

Erwin Junker Grinding Technology a.s.
Sokolovska 68/105
186 00 Praha 8-Karlin
Czech Republic
Phone: +420 224 890 610
Fax: +420 224 818 244
E-Mail: info@grindor.cz
www.grindor.com

JUNKER
partner for precision

HARDPOINT

Allrounder for High Precision Finish Machining

HARDPOINT 300

Versatility that Pays Off

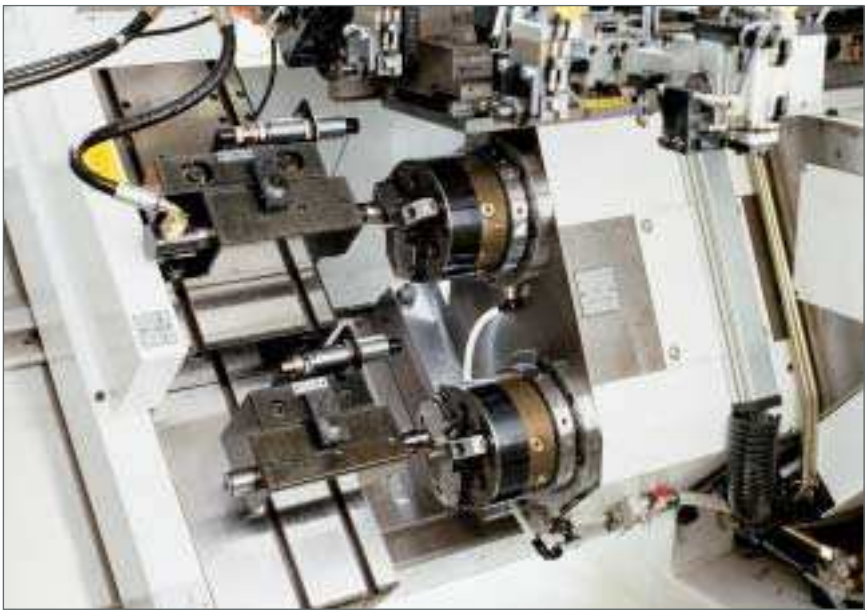

Innovative Concept

The various HARDPOINT machine versions can be used for superfinishing of hardened and unhardened rotationally symmetrical components.
This means turning, grinding, drilling and rubbing on one machine, in a single chucking. Depending on the model, the workpieces can also be transferred to another machining unit (multi machine cell).

Technical Advantages

- Quality improvement through complete machining in one chucking
- Outer and inner contours, including shoulders, tapers, chamfers, fillets and screw threads
- Through the integration of modular components (optional units), cutting options such as drilling, grinding, brushing or deburring are possible
- Versions for complete machining of both ends of the workpiece
- Configuration of a multitude of high-performance cutting tools for each turning application
- 3D probe: Each cutting tool on the tool magazine is automatically accurately measured to the exact µ. The measurements are archived in a tool database
- Fast tool change
- Configuration of high speed CBN grinding wheels and the corresponding dressing tools
- Modular machine design for any batch size
- No requirement for coolant, economic recycling and low cost disposal of the swarf

Flexible Configuration

With up to four main spindles and max. 6 axes, HARDPOINT offers a solution-orientated machine concept for practically any task. The HARDPOINT machines are a guarantee for cost-effective finishing processes, whenever a combination of hard turning and grinding (external/internal) is required.
Typical workpieces come from (for example) the following fields: injection technology, motor technology, mechatronics and medical technology.

Overview of HARDPOINT Versions

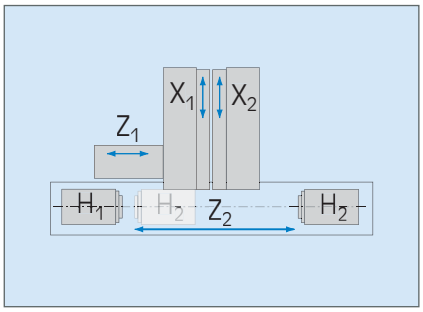

HARDPOINT 301/2

Machining of two workpieces simultaneously => with transferring.

The workpieces in the main spindles H1 and H2 are machined simultaneously and independently. When the first machining operations in the main spindle H1 are completed then the workpiece is transferred and gripped in main spindle H2 for the final machining operations.

H1, H2:
Main spindles

X1, X2, Z1, Z2:
Axes

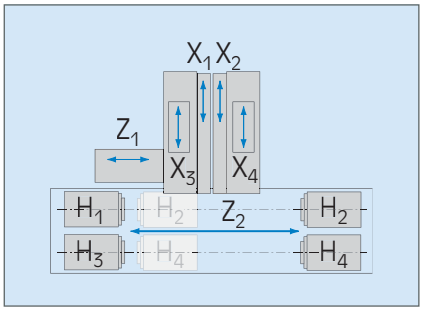

HARDPOINT 301/4

Machining of four workpieces simultaneously => with transferring.

The workpieces in the main spindle units H1/H3 and H2/H4 are machined simultaneously and independently. When the first machining operations in main spindle unit H1/H3 are completed the workpiece is transferred and gripped in main spindle unit H2/H4 for the final machining operations.

H1, H2, H3, H4:
Main spindles

X1, X2, X3, X4, Z1, Z2:
Axes

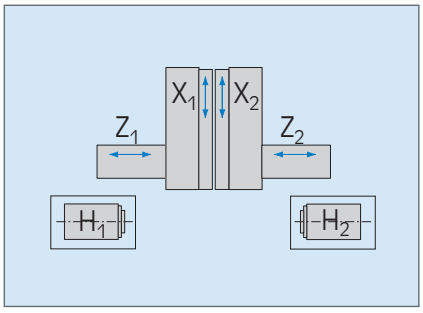

HARDPOINT 302/2

Machining of two workpieces simultaneously => without transferring.

The workpieces in the main spindles H1 and H2 are machined simultaneously and independently. It is not possible to transfer the workpiece from main spindle H1 to main spindle H2.

H1, H2:
Main spindles

X1, X2, Z1, Z2:
Axes

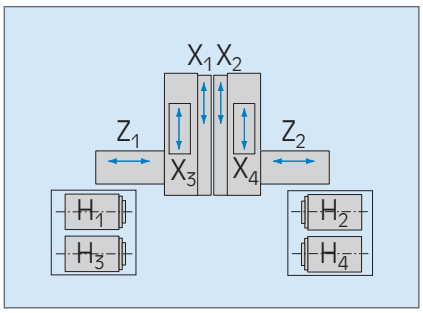

HARDPOINT 302/4

Machining of four workpieces simultaneously => without transferring.

The workpieces in the main spindle units H1/H3 and H2/H4 are machined simultaneously and independently. It is not possible to transfer the workpieces from main spindle unit H1/H3 to main spindle unit H2/H4.

H1, H2, H3, H4:
Main spindles

X1, X2, X3, X4, Z1, Z2:
Axes

Control System

- Siemens Sinumerik 840 D
- Graphic interface and interactive processes for programming and operation
- Quick change-over and setup
- Storage of all machining parameters
- Integrated loader control (optional)
- Teleservice (optional)

Siemens Sinumerik 840 D

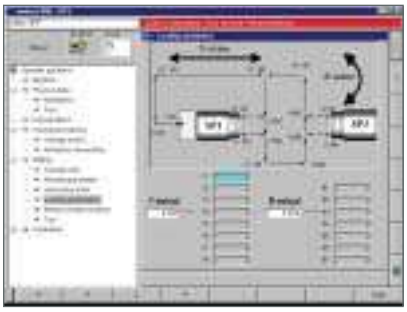

Entering loading parameters

Options

Automation

- Hand loader
- Fully automatic loading and unloading systems outside of the machine
- Fully automatic loading and unloading systems integrated into the machine.

External loading and unloading system

Internal loading and unloading system

Modular components

- HF grinding spindles
- Synchronisation of main spindles
- C-axis
- Oil mist cleaning unit
- High-pressure unit for deep hole drilling
- Swarf conveyor

HF grinding spindle

Swarf conveyor

Measuring technology

- In-process
- Postprocess
- Monitoring of wear on tooling

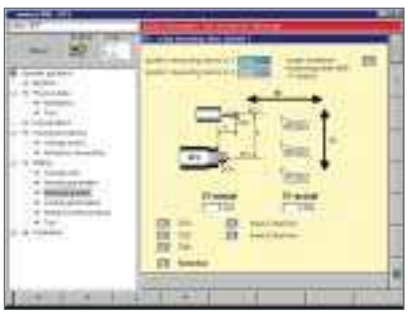

Setting up the probes

Monitoring of wear on tooling

Technical Data

Series	301/2	301/4	302/2	302/4
Maximum swing diameter	160 mm			
Path of X1/X2 axis	310 mm		380 mm	
Path of Z1 axis	205 mm		220 mm	
Path of Z2 axis	785 mm		220 mm	
Speed range of workpiece spindle	max. 8000 rpm (HF grinding spindle: max. 10000 rpm)			
Spindle carrier	Junker standard shoulder: ø 75 mm			
High speeds	up to 30 m/s			
Control system	Siemens Sinumerik 840 D			
Machine dimensions (WxDxH)	Approx. 3000 mm x 2500 mm x 2170 mm			
Machine dimensions with swarf conveyor (WxDxH)	Approx. 4300 mm x 2500 mm x 2170 mm			
Machine weight	Approx. 2500 kg			

JUNKER
Maschinen

Erwin Junker
Maschinenfabrik GmbH
Junkerstraße 2
77787 Nordrach
Germany

Phone: +49 (0)7838 84-0
Fax: +49 (0)7838 84-302
E-Mail: info@junker.de
www.junker-group.com

JUNKER
Grinding Technology

Erwin Junker
Grinding Technology Mělník Ltd.
Sokolovská 68/105
18600 Praha 8 - Karlín
Czech Republic

Phone: +420 2 24 89 06 10
Fax: +420 2 24 81 82 44
E-Mail: info@junker.cz
www.junker-group.com

JUNKER
Machine Tools

Junker Machine Tools &
Technology (UK) Ltd.
Hadleigh House
32 Sefton Road
Fulwood Park
Sheffield S10 3TP · U.K.

Phone: +44 (0)114 230 34 53
Fax: +44 (0)114 230 93 82
E-Mail: info@junker-group.co.uk
www.junker-group.com

JUNKER
Machinery

Erwin Junker
Machinery Inc.
2029 Lyons Road
Dayton, OH 45342
USA

Phone: +1 937 433 07 74
Fax: +1 937 433 07 75
E-Mail: info@junker-usa.com
www.junker-usa.com

JUNKER
Maschinen

Erwin Junker
Maschinenfabrik GmbH
Shanghai Representative Office
Rm.1304 New Caohejing Tower
509 Cao Bao Road
Shanghai 200233 · P.R. China

Phone: +86 (0)21 64 85 98 72
Fax: +86 (0)21 64 85 98 73
E-Mail: info@junker.com.cn
www.junker.com.cn

We reserve the right to make changes that serve technical advancement.

8.28991 E 0903

JUNKER
partner for precision

JUCAM

CBN Camshaft Grinding

JUCAM 1000
JUCAM 3000
JUCAM 5000
JUCAM 6000

Flexibility by nature

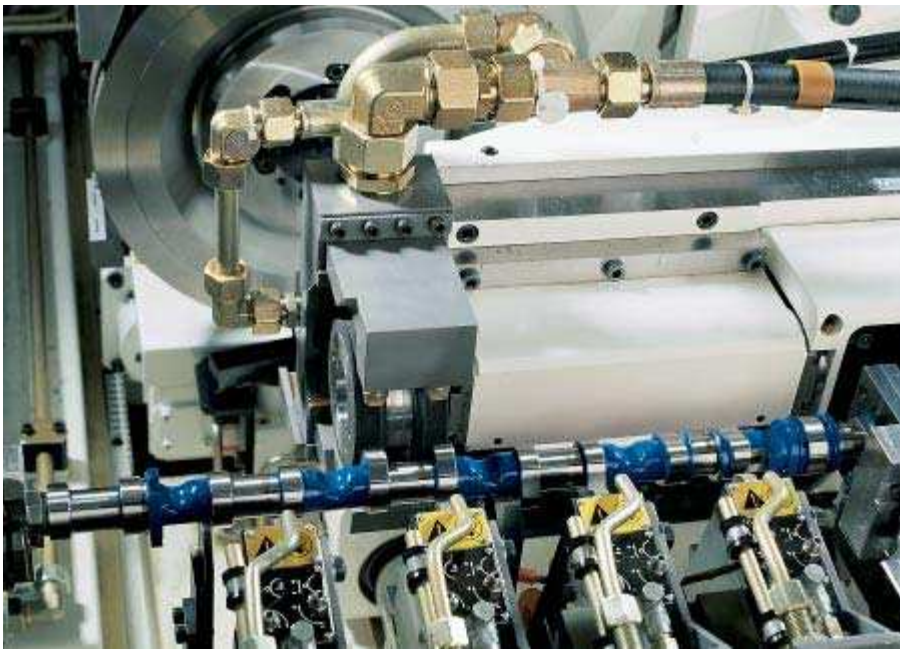

Unround grinding for camshafts

The JUCAM series unround grinding machines from JUNKER are a versatile solution for complete machining of camshafts. All cam contours are covered:

- cylindrical
- concave/convex
- with/without chamfers
- with/without radius
- with tangent
- polygon/elliptic

Depending on the type of machining and the production quantity you need, JUNKER designs custom platforms and wheelheads and installs them on your JUCAM machines.

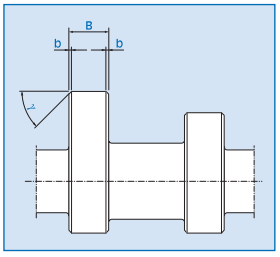

Cylindrical cam contour; with/without chamfers, with/without radius

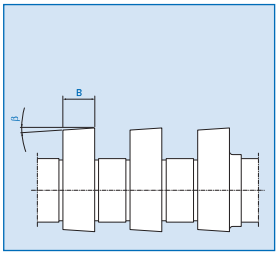

Cam contour with conical geometry

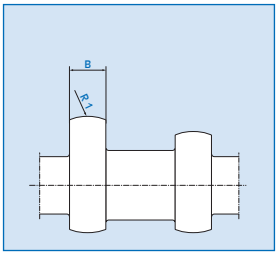

Cam contour with convex geometry

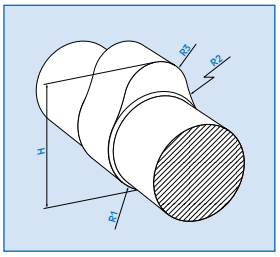

Cam contour with concave geometry

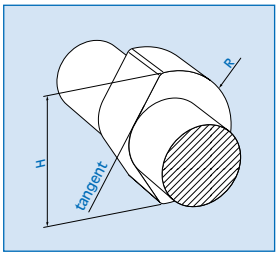

Cam contour with tangent

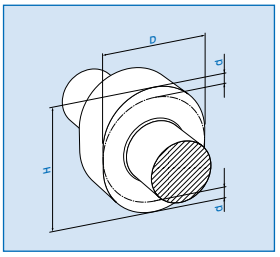

Elliptic contours

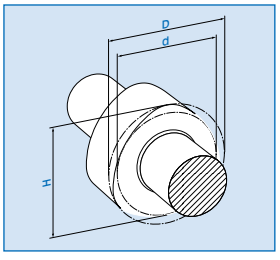

Polygon contours

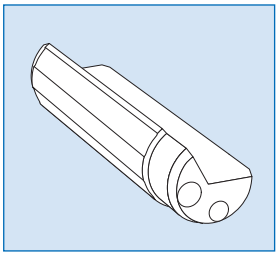

Gun drills

Rough and Finish Grinding in one clamping

Cams, bearings, ends, thrust bearing shoulders, and camshaft adjustment seats can be ground in one clamping by JUCAM unround grinding machines. The use of CBN grinding wheels makes rough grinding possible as well as precise finish grinding. These machines are not only used in the automotive industry but also in the textile and pump industry as well as in cutting tools and gun drills.

Economic Benefits

- Flexible adjustment to various numbers of cylinders by changing CNC program (optional)
- Highly flexible grinding of cams and bearings using oscillating grinding
- Time savings in complete machining processes by elimination of second handling step
- High precision with the "Learning Function"
- Long utilisation ratio using CBN abrasives and oil as coolant
- Dressing equipment and procedures designed for the process
- in-process gauging of the bearings guarantees high dimensional quality
- High accuracy due to only one clamping procedure
- Constant specific material removal rate
- Operator guided change-over
- Extensive tools for service support and preventive maintenance

Technical Advantages

- Correction of the cam contour possible by an interface
- Control with "Learning Function", includes automatic compensation for cam contour deviations and factors of influence. Compensable factors of influence include: temperature, mechanical and dynamic factors, stock variations, material and structure changes, cutting capability of grinding wheel
- Since the cams and bearings are ground in a single clamping, the deviation is theoretically zero
- Plunge grinding and oscillating grinding
- Support of "sensitive parts" on the bearing using self-centring three-point steady rest
- High long-term precision using hydrostatic round guide ways and hydrostatic infeed spindle in the X-axis (grinding infeed)

JUCAM grinds all types of camshafts in a single clamping

More Experience for More Safety

Right from the beginning, JUNKER has been implementing CBN grinding wheels for high-speed machining. This advance in experience and knowledge has allowed us to become the leader in this segment. Reliable and economical machines for grinding automotive parts is one of our main business areas. This is proven by our many renowned customers, some of whom have been convinced by JUNKER's complete machining technology since 1995. JUNKER grinding machines also feature an integrated mist extraction system as part of a sophisticated safety concept that solves the deflagration problem when grinding oil is used.

Built for Precision

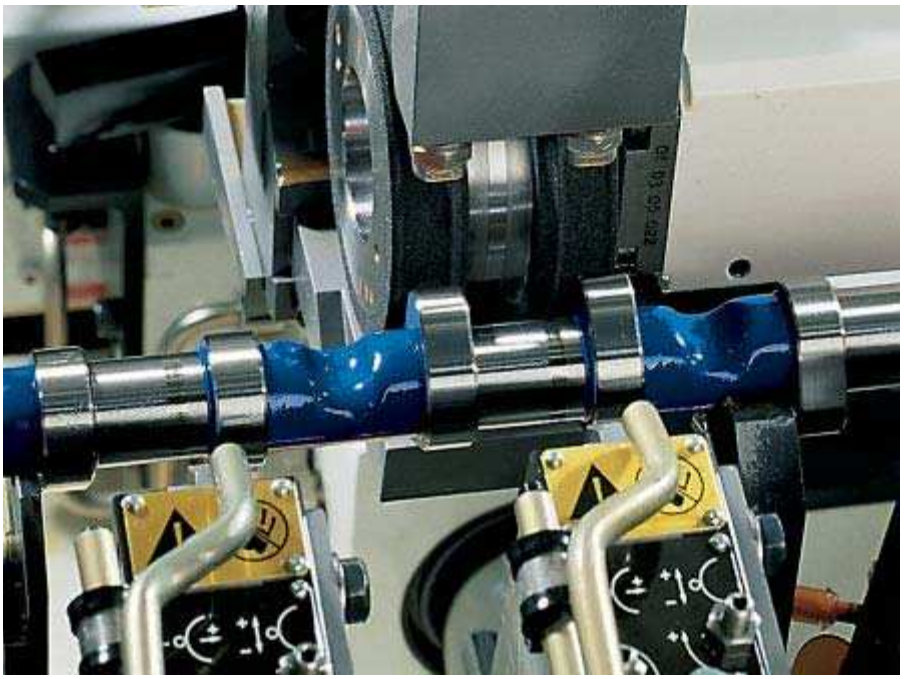

Grinding concave cam contour with CBN

Equipment

- Vibration-reducing, torsion-resistant machine base, compound-filled with concrete polymer
- Hydrostatic round guide ways, no stick-slip effect, 5-year guarantee
- 3-point clamping system on grinding spindle, workpiece spindle, and tailstock
- Wheel head with automatic dynamic balancing system
- Grinding spindle for high-speed grinding at up to 140 m/s
- Work head with hydraulic clamping

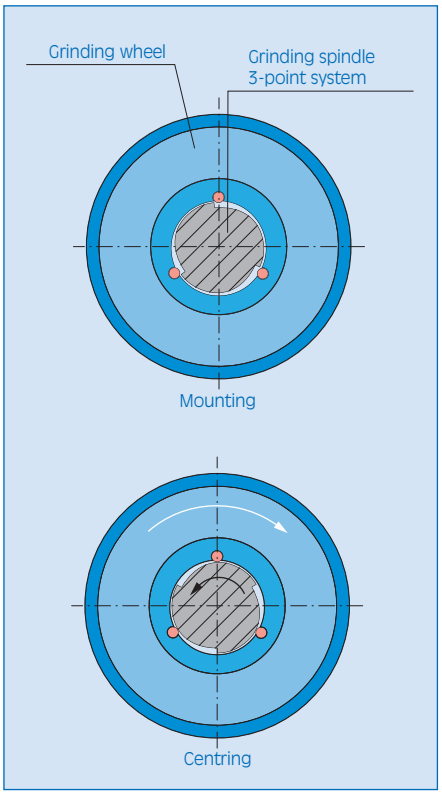

Grinding wheel assembly: 3-point assembly system (also suitable for grinding wheels without standard collar)

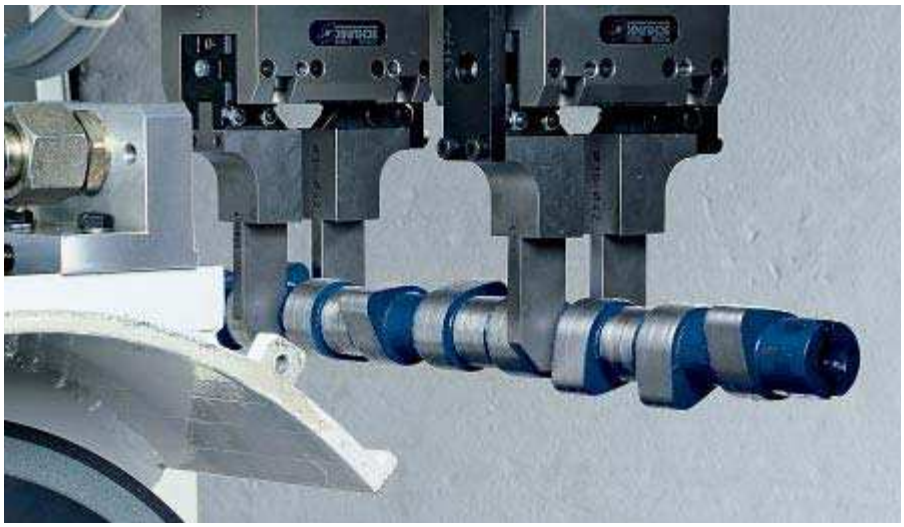

Only possible with JUNKER machines: Workpiece transport with internal loading gantry

Options

- Plane dressing unit
- Steady rests
- Length and radial positioning in the machine
- Measuring device
- Internal loader

External Loading Systems Made to Order

Depending on your specifications, we can customise your JUCAM machine to include a manual, semi-automatic, or fully-automatic modular loading system. Contact us and we will provide you with a custom solution.

JUNKER's Central CNC Control Design

A comprehensive open system

The idea: centralised control technology for all components in the grinding machine. All entries and information pass through the Erwin Junker Operator Panel EJ-OP.

Installation: Safe and Easy

JUNKER's hard- and software concept significantly reduces the effort in installing JUCAM unround grinding machines. Special software tools allow for a safe and quick installation.

Teleservice: Fast and Effective

Your main contact for all questions and problems is the JUNKER Service Centre (JSC) with its hotline. When required, all machine data can be accessed online. This special service helps reduce downtime and keeps service costs low.

The Benefits of the Hard- and Software Design

- All components can be accessed by Teleservice
- Identical operation of different machines, independently of the implemented control system
- Unified user interface for all components
- Automatic data backups, also for settings in components from third-party manufacturers

Operator Panel EJ-OP: Uniform for All Machines

- Graphic interface and interactive processes for programming and operation
- Reduced training expenditures
- Minimises the risk of operator errors
- Quick change-over and setup
- Storage of all machining parameters
- Machine programming can also be done centrally, e.g., in the planning department

Erwin Junker Operator Panel EJ-OP

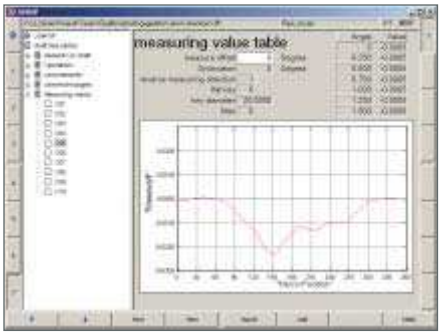

Measuring values, polar coordinates

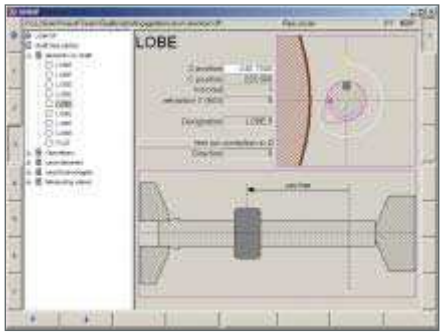

Specifications of shaft design, details

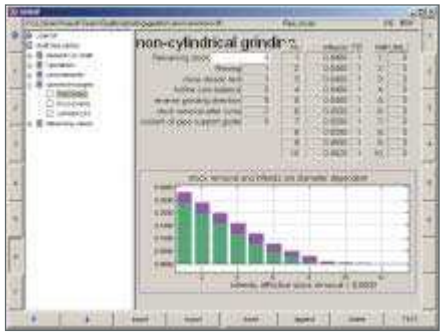

Technologies used

Overview of Machine Types

JUCAM 1000

JUCAM 3000

JUCAM 5000

JUCAM 6000

Wheelhead options

JUNKER offers different wheelheads for all of the typical camshaft machining processes. The chart on page 7 shows the available wheelheads for each JUCAM machine type.

Version/10-10L

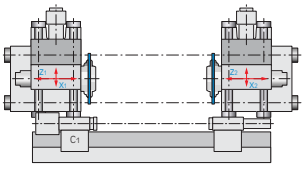

JUCAM 6000

Version/50-50

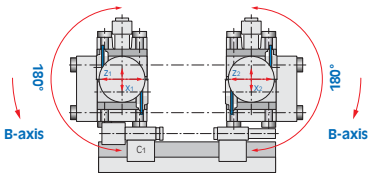

JUCAM 6000

Possible Combinations

Series	1000			3000							5000							6000		
Version	/10	/20	/50	/10	/11	/20	/50	/51	/60	/61	/10	/11	/20	/50	/51	/60	/61	/10-10 /10-50 /50-50	/10L	/10-10L
Grinding the cams	■			■	■	■	■	■	■	■	■	■	■	■	■	■	■	■	■	■
Grinding the bearings	■			■	■	■	■	■	■	■	■	■	■	■	■	■	■	■	■	■
Grinding the bearings, cams, and ends	❑			❑	❑	❑	❑	❑	❑	❑	❑	❑	❑	❑	❑	❑	❑	❑	❑	❑
Clamping length	150			400							700							900	2000	1700
Grinding length	150			400							700							750	1800	1500
Swing diameter	80			150							280							280	320	320
Max. grinding wheel diameter	350			350							450							450	700	700

■ possible ❑ conditionally possible All dimensions given in mm

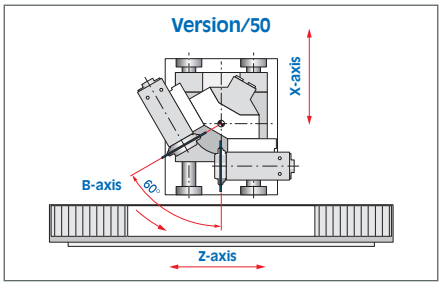

JUCAM 5000

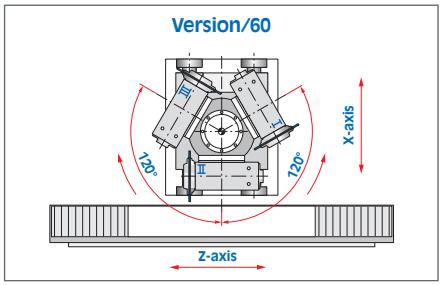

JUCAM 3000

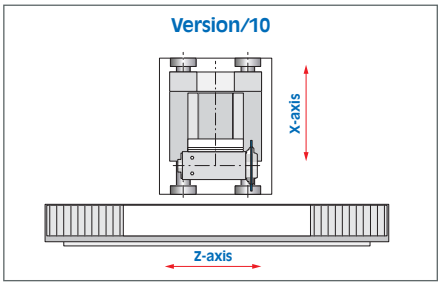

JUCAM 3000

JUNKER
Maschinen

Erwin Junker
Maschinenfabrik GmbH
Junkerstraße 2
77787 Nordrach
Germany

Phone: +49 (0)7838 84-0
Fax: +49 (0)7838 84-302
E-Mail: info@junker.de
www.junker-group.com

JUNKER
Grinding Technology

Erwin Junker
Grinding Technology Mělník Ltd.
Sokolovská 68/105
18600 Praha 8-Karlín
Czech Republic

Phone: +420 2 24 89 06 10
Fax: +420 2 24 81 82 44
E-Mail: info@junker.cz
www.junker-group.com

JUNKER
BSH Machines

BSH Holice Ltd.
Pardubická 332
53413 Holice
Czech Republic

Phone: +420 466 00 31 11
Fax: +420 466 68 21 49
E-Mail: info@junker.cz
www.junker-group.com

JUNKER
Machine Tools

Junker Machine Tools &
Technology (UK) Ltd.
Hadleigh House
32 Sefton Road
Fulwood Park
Sheffield S10 3TP · U.K.

Phone: +44 (0)114 230 34 53
Fax: +44 (0)114 230 93 82
E-Mail: info@junker-group.co.uk
www.junker-group.com

JUNKER
Machinery

Erwin Junker
Machinery Inc.
2029 Lyons Road
Dayton, OH 45342
USA

Phone: +1 937 433 07 74
Fax: +1 937 433 07 75
E-Mail: info@junker-usa.com
www.junker-usa.com

JUNKER
Maschinen

Erwin Junker
Maschinenfabrik GmbH
Shanghai Representative Office
Rm. G. H, 11 Floor, North Gate Plaza
No.99 Tianmu Road West
Shanghai 200070 · P.R. China

Phone: +86 (0)21 63 80 69 11
Fax: +86 (0)21 63 80 69 55
E-Mail: info@junker.com.cn
www.junker.com.cn

JUNKER
Maschinen

Erwin Junker
Maschinenfabrik GmbH
Beijing Representative Office
Rm. 1606 Liye Building
No.71 Majiapu Road East, Fengtai Dist.
Beijing 100068 · P.R. China

Phone: +86 (0)10 51 16 50 66
Fax: +86 (0)10 51 16 50 22
E-Mail: info@junker.com.cn
www.junker.com.cn

We reserve the right to make changes that serve technical improvement.

8.30742 E 1004

JUNKER
partner for precision

JUCENTER

Productive CBN high-performance grinding

Fully automated serial production

Grinding of cam shafts in a machine with 2 stations

The newly developed CBN high-performance grinding machine JUCENTER offers many advantages: by making use of the multi-layer grinding technology on station 1, very short processing times can be realised. To ensure that both stations can be charged with the same processing time, radial and lengthwise positioning results can be transferred from station to station. With the use of two independent feed axes on station two for the non-round processing, it is possible to quickly treat cams with an uneven radial alignment as when using grinding wheel sets.

The result: high accuracy and a convincing cost-effectiveness.
What is also remarkable: how little space is required in comparison to two individual machines, as well as potential savings in the periphery of the machine – it all serves to underscore the appeal of he JUCENTER.

Highly economic multi-wheel grinding

On station 1, grinding of the bearings in a set with multi-layer technology in a plunge-cut.

Non-round grinding for cam shafts

On station 2 of the JUCENTER, JUNKER offers a versatile solution for the grinding of all kinds of cam shafts with individual grinding wheels or grinding wheel sets for convex and concave cam shapes.

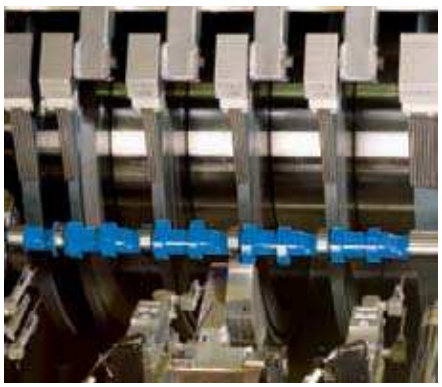

Grinding station 1

Grinding station 2

Technical Data

Workpiece specifications:	JUCENTER 6 L
Center height:	max. 170 mm
Swing diameter:	max. 280 mm
Clamping length:	max. 500 mm
Grinding length:	max. 500 mm
Workpiece weight between centers:	max. 30 kg.
Machine data	
Abrasive:	CBN
Feed motion:	X-axis, CNC
Longitudinal motion:	Z-axis, CNC
Resolution of infeed axes:	0,0001 mm
Weight of the machine:	approx. 28.000 kg
Dimensions without coolant system (W x D x H):	4.500 x 3.000 x 2.250 mm

We reserve the right to make changes that serve technical progress.
7500667 E September 2007

JUNKER
partner for precision

JUCRANK

CBN Crankshaft Grinding

JUCRANK 1000
JUCRANK 3000
JUCRANK 5000
JUCRANK 6000

Economical and Versatile Production

Oscillating Grinding Machines for All Types of Crankshafts

The JUCRANK oscillating grinding machines from JUNKER are a versatile solution for the complete machining of crankshafts. You can machine all types of crankshafts from single-cylinder to twelve-cylinder crankshafts. Depending on the type of machining and the production quantity you need, JUNKER designs custom platforms and wheelheads and installs them on your JUCRANK machines.

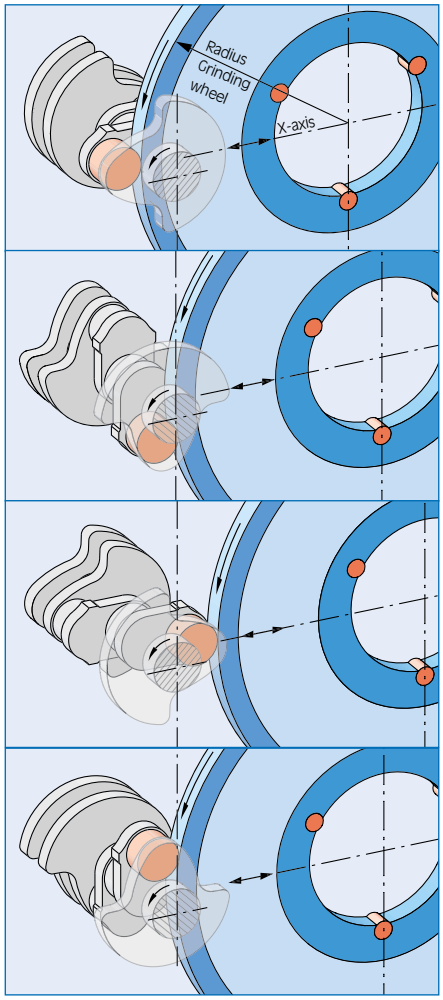

Oscillating grinding machines – the grinding wheel follows the circular rotation of the pin bearing in the horizontal axis

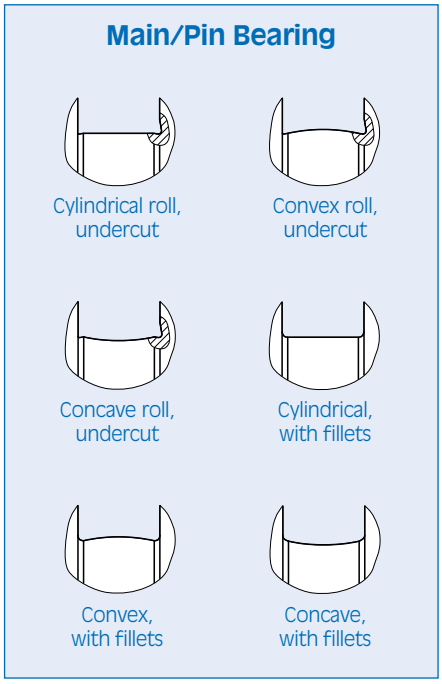

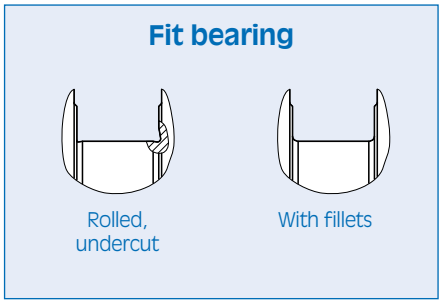

Rough and Finish Grinding in a Single Chucking

JUCRANK oscillating grinding machines are the solution for almost all grinding tasks in crankshaft machining. You can grind main bearings (cylindrical, concave, convex) and pin bearings (cylindrical, crowned, concave, and convex) in a single chucking. Even hardened fillets can be ground. Furthermore, JUNKER can provide you with almost any imaginable combination with other grinding processes. Depending on your combination of machines, you can also machine thrust walls, flanges and journals using other JUNKER machines.

Economic Advantages

- Flexible adjustment for various numbers of cylinders by changing CNC program
- Highly flexible grinding of main and pin bearing using oscillating axial grinding
- Time savings in complete machining processes through elimination of second handling and operation
- High consistency of quality using "Learning Function Facility"
- Long wheel life using CBN and oil coolant
- Advanced dressing system and control
- Controlled dimensional accuracy using in process gauging
- High precision using single chucking

Technical Advantages

- Measurement and correction of roundness and dimensions during machining
- Process control using "Learning Function", including automatic compensation for roundness deviation and other parameters. Parameters which may be compensated for include temperature, mechanical and dynamic factors, stock removal variations, variation in material structure, grinding characteristics of the grinding wheel, degree of machine wear.
- Since the main and pin bearings are ground in a single chucking, the deviation is theoretically zero
- Plunge grinding and oscillating grinding
- Support of "sensitive parts" on main bearing using self-centering three-point steady rest
- CNC-controlled coolant nozzle ensures that it is always fed into the grinding zone
- High long-term precision using hydrostatic centring (x-axis guide, infeed spindle, axial bearing)

JUCRANK grinds all types of crankshafts in a single chucking

More Experience for More Safety

Right from the beginning, JUNKER has been using the combination of CBN grinding wheel with oil cooling for high-speed crankshaft machining. This advance in experience and knowledge has allowed us to become leaders in this market segment. The manufacture of reliable and economical machines for grinding automotive parts is one of our main business areas. This is evidenced by our many customers, some of whom who have been won over by JUNKER complete machining technology since 1995. The safety concepts that we have developed in response to the blow back problem has increased the recognition and profile of JUNKER Grinding Machines over our competitors.

Built for Precision

A concentration of high technology: JUCRANK 5000

Equipment

- Vibration-reducing, torsion-resistant machine pads manufactured from gray cast iron
- Hydrostatic centring, free of stick-slip, 5-year guarantee
- 3-point chucking system for grinding spindle, workpiece spindle, and tailstock centre sleeve
- Wheelhead with automatic dynamic balancing system
- Grinding spindle for high-speed grinding at up to 140 m/s
- Workhead with hydraulic clamping

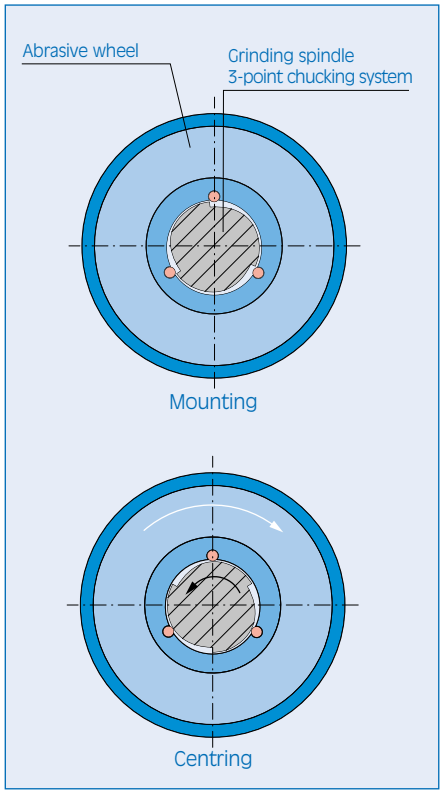

Abrasive wheel mount:
3-point chucking system (also suitable for abrasive wheels without standard shoulder)

Gantry loading system for successive grinding processes

Options

- Plane dressing unit
- Steady rests
- Longitudinal and radial positioning in the machine

External Loading Systems Custom Made to Requirement

Depending on your specifications, we can customise your JUCRANK machine to include a manual, semi-automatic, or fully-automatic modular loading system. Contact us and we will provide you with a custom solution.

JUNKER's Centralised CNC System Concept

A Comprehensive Open System

The idea: centralised control technology for all components in the grinding machine. All data and information is entered using the Erwin Junker Operator Panel EJ-OP.

Installation: Safe and Easy

JUNKER's hard- and software concept significantly reduces the effort in installing oscillating grinders. Special software tools make a safe and quick installation possible.

Teleservice: Fast and Effective

Your main contact for all questions and problems is the JUNKER Service Centre (JSC) with its hotline. When required, all of the machine status data can be accessed online. This special service helps to reduce downtime and service costs.

Advantages of the Hard- and Software Concept

- All components can be accessed via teleservice
- Identical operation of different machines, independent from the implanted control system
- Unified user interface for all components
- Automatic data backups, also for the settings for components from third-party manufacturers

Operator Panel EJ-OP: Uniform for All Machines

- Graphic interface and interactive processes for programming and operation
- Reduced training costs
- Minimises the risk of operator errors
- Quick change-over and set-up
- Storage of all machining parameters
- Machine programming can also be done centrally, e.g., in the planning department

Erwin Junker Operator Panel EJ-OP

Measuring values, polar coordinates

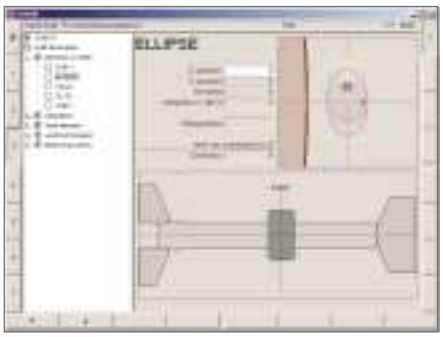

Description of shaft design, details

Technologies used

Overview of Machine Types

JUCRANK 1000

JUCRANK 3000

JUCRANK 5000

JUCRANK 6000

Wheelhead Variants

JUNKER offers different wheelheads for all of the typical crankshaft machining processes. The table on page 7 lists the available wheelheads for each JUCRANK machine type.

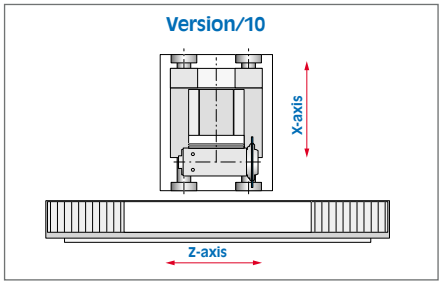

JUCRANK 3000/10

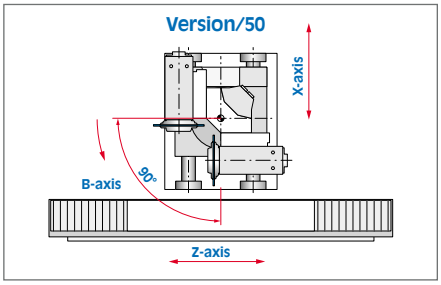

JUCRANK 3000/50

Possible Combinations

Series	1000		3000			5000			6000		
Version	/10	/50	/10	/50	/60	/10	/50	/60	/10-10 /10-50 /50-50	/10L	/10-10L
Grinding the pin bearing	■	■	■	■	■	■	■	■	■	■	■
Grinding the main and pin bearing	❑	■	❑	■	■	❑	■	■	■	❑	■
Grinding the main/pin and fit bearings	❑	❑	❑	❑	■	❑	❑	■	❑	❑	❑
Clamping length	150 mm		400 mm			700 mm			900 mm	2000 mm	1700 mm
Grinding length	150 mm		400 mm			700 mm			750 mm	1800 mm	1500 mm
Swing diameter	80 mm		150 mm			280 mm			280 mm	320 mm	320 mm
Max. grinding wheel diameter	350 mm		350 mm			450 mm			500 mm	700 mm	700 mm

■ Possible

❑ Conditionally possible

Version/60

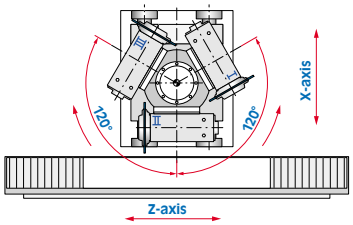

JUCRANK 3000/60

Version/10-10L

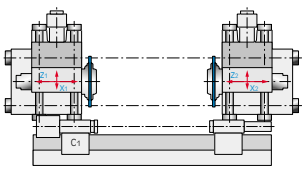

JUCRANK 6000

Version/50-50

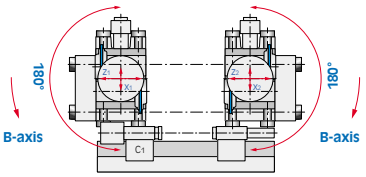

JUCRANK 6000

JUNKER
Maschinen

Erwin Junker
Maschinenfabrik GmbH
Junkerstraße 2
77787 Nordrach
Germany

Phone: +49 (0)7838 84-0
Fax: +49 (0)7838 84-302
E-Mail: info@junker.de
www.junker-group.com

JUNKER
Grinding Technology

Erwin Junker
Grinding Technology Mělník Ltd.
Sokolovská 68/105
18600 Praha 8-Karlín
Czech Republic

Phone: +420 2 24 89 06 10
Fax: +420 2 24 81 82 44
E-Mail: info@junker.cz
www.junker-group.com

JUNKER
BSH Machines

BSH Holice Ltd.
Pardubická 332
53413 Holice
Czech Republic

Phone: +420 466 00 31 11
Fax: +420 466 68 21 49
E-Mail: info@junker.cz
www.junker-group.com

JUNKER
Machine Tools

Junker Machine Tools &
Technology (UK) Ltd.
Hadleigh House
32 Sefton Road
Fulwood Park
Sheffield S10 3TP · U.K.

Phone: +44 (0)114 230 34 53
Fax: +44 (0)114 230 93 82
E-Mail: info@junker-group.co.uk
www.junker-group.com

JUNKER
Machinery

Erwin Junker
Machinery Inc.
2029 Lyons Road
Dayton, OH 45342
USA

Phone: +1 937 433 07 74
Fax: +1 937 433 07 75
E-Mail: info@junker-usa.com
www.junker-usa.com

JUNKER
Maschinen

Erwin Junker
Maschinenfabrik GmbH
Shanghai Representative Office
Rm. G. H, 11 Floor, North Gate Plaza
No.99 Tianmu Road West
Shanghai 200070 · P.R. China

Phone: +86 (0)21 63 80 69 11
Fax: +86 (0)21 63 80 69 55
E-Mail: info@junker.com.cn
www.junker.com.cn

JUNKER
Maschinen

Erwin Junker
Maschinenfabrik GmbH
Beijing Representative Office
Rm. 1606 Liye Building
No.71 Majiapu Road East, Fengtai Dist.
Beijing 100068 · P.R. China

Phone: +86 (0)10 51 16 50 66
Fax: +86 (0)10 51 16 50 22
E-Mail: info@junker.com.cn
www.junker.com.cn

We reserve the right to implement technical improvements without prior notice.

8.28983 E 1004

Versatility and precision

High performance for the most different application areas

One of the JUNKER core competencies is grinding with CBN wheels. JUMAT OD grinding machines can be used for individual or combined grinding operations in straight and/or angeled infeed method:

- Diameter
- Plane shoulders
- Undercuts
- Flutes
- Tapers
- Chamfers

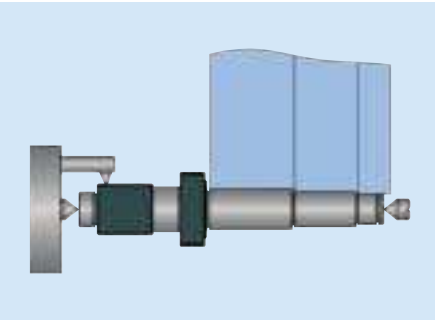

Straight infeed grinding

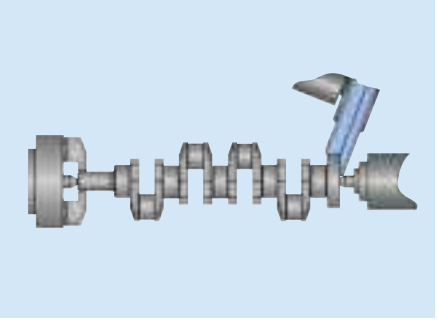

Angel infeed grinding

Individuality for enhanced profitability

The four JUMAT sizes and many different grinding spindle head combinations facilitate individual combinations for maximum profitability and flexibility. Paired with different dressing systems, almost all customer requirements can be met. Thanks to the comfortable EJ-OP (Erwin Junker operating panel) as well as an intelligent control technology, every JUMAT grinding machine additionally offers a maximum degree of operator friendliness.

Flexibility for numerous sectors

The JUMAT versatility pays off in the automotive industry and at its suppliers. It is furthermore used for applications in the field of mechanical engineering and information technology as well as in the electrical industry.

Typical products for cylindrical grinding are:

- Gearshafts
- Camshafts
- Crankshafts
- Rotor shafts
- Injection pump parts such as pump pistons and nozzle bodies

Typical products for flute grinding:

- Gearshafts
- Pump components such as impellers
- Injection pump components such as pump pistons, anchor plates and anchor bolts

Technical data

JUMAT 1000

JUMAT 3000

JUMAT 5000

JUMAT 6000

Series	JUMAT 1000			JUMAT 3000					JUMAT 5000				
Version	/10	/20	/50	/10	/20	/40	/50	/60	/10	/20	/40	/50	/60
Clamping length in mm	150			500					1000				
Grinding length* in mm	150			500					900				
Center height in mm	100			150					170				
Workpiece weight in kg	5			15					130				
Grinding wheel diameter in mm	350			350					400				
Width x Depth x Height in mm	1400 x 2850 x 2000			3550 x 2850 x 2100					4850 x 3850 x 2350				
Machine weight in kg Control cabinet weight in kg	6000 incl.			8000 1000					13000 1500				

Series	JUMAT 6000				
Version	/10-10	/10-50	/50-50	/10-L	/10-10L
Clamping length in mm	900			2000	1700
Grinding length* in mm	750			1800	1500
Center height in mm	170			170	170
Workpiece weight in kg	150			200	200
Grinding wheel diameter in mm	500			700	700
Width x Depth x Height in mm	3700 x 3750 x 2450			4500 x 3750 x 2450	4500 x 3750 x 2450
Machine weight in kg Control cabinet weight in kg	24000 2000				

* May vary depending on the respectively used accessoires

JUNKER
partner for precision

EUROPE

JUNKER Maschinen

Erwin Junker
Maschinenfabrik GmbH
Junkerstraße 2
77787 Nordrach
Germany

Phone: +49 (0)7838 84-0
Fax: +49 (0)7838 84-302
E-Mail: info@junker.de
www.junker-group.com

JUNKER Grinding Technology

Erwin Junker
Grinding Technology Mělník Ltd.
Sokolovská 68/105
18600 Praha 8-Karlín
Czech Republic

Phone: +420 2 24890610
Fax: +420 2 24818244
E-Mail: info@junker.cz
www.junker-group.com

JUNKER BSH Machines

BSH Holice Ltd.
Pardubická 332
53413 Holice
Czech Republic

Phone: +420 466 003111
Fax: +420 466 682149
E-Mail: info@junker.cz
www.junker-group.com

EUROPE

JUNKER Machines Outils

JUNKER France
13 rue Camille-Desmoulins
92441 Issy Les Moulineaux Cedex
France

Phone: +33 (0)1 58042781
Fax: +33 (0)1 58042300
E-Mail: info@junker-france.com
www.junker-group.com

JUNKER Machine Tools

Junker Machine Tools &
Technology (UK) Ltd.
Hadleigh House
32 Sefton Road, Fulwood Park
Sheffield S10 3TP
U.K.

Phone: +44 (0)114 2303453
Fax: +44 (0)114 2309382
E-Mail: info@junker-group.co.uk
www.junker-group.com

NORTH AMERICA

ERWIN JUNKER
High Performance Grinding Systems

Erwin Junker
Machinery Inc.
1524 Davis Road
Elgin, IL 60123
USA

Phone: +1 847 488 0406
Fax: +1 847 488 0436
E-Mail: info@junker-usa.com
www.junker-usa.com

ASIA

JUNKER Maschinen

Erwin Junker Maschinenfabrik GmbH
Shanghai Representative Office
Rm. G. H, 11 Floor, North Gate Plaza
No.99 Tianmu Road West
Shanghai 200070
P.R. China

Phone: +86 (0)21 63806911
Fax: +86 (0)21 63806955
E-Mail: info@junker.com.cn
www.junker.com.cn

JUNKER Maschinen

Erwin Junker Maschinenfabrik GmbH
Beijing Representative Office
Rm. 1606 Liye Building
No.71 Majiapu Road East, Fengtai Dist.
Beijing 100068
P.R. China

Phone: +86 (0)10 51165066
Fax: +86 (0)10 51165022
E-Mail: info@junker.com.cn
www.junker.com.cn

Modifications for the sake of technical improvement reserved.

8.31582 E 0805

JUNKER
partner for precision

JUMAXIMAT

High-productivity complete grinding

JUMAXIMAT

Highly productive and highly flexible

High performance in all applications

JUMAXIMAT – the machine concept for the flexible and efficient complete machining of high-precision cutting tools.

The following cutting tools (diam. 6-32 mm) made from HSS or HM can be machined using the JUMAXIMAT:
End mills, die-sinking cutters, roughing mills, 1-tooth milling cutters, reamers, tap drills, wood borers, wood form cutters, countersinks, counterbore, thread milling cutters

Technology with no ifs or buts

These precision tools are fully machined from solid blanks. The tools are ground either unsupported or with tailstock support. If necessary a steady rest can be used for support.
Corundum or CBN grinding wheels in the case of HSS tools or diamond grinding wheels in the case of tungsten carbide tools are used as abrasives.
Up to 4 grinding wheels can be mounted on the grinding spindle. The wheelhead can be swivelled to the left by 53° and by 90° to the right.
The height and horizontal adjustment, as well as the axial infeed of the grinding wheels and the swivel movements and workpiece drive, are CNC-controlled.

Your advantages

- Complete machining of the entire tooth geometry in one clamping
- High flexibility thanks to reduced retooling times
- All relief angles of the surface bezels are freely programmable. Only one grinding wheel required

Impressive: the integrated dressing system

The dressing system allows the profiling / dressing of grinding wheels in the machine in a fully-automatic cycle. The dressing process is monitored using impact sound approach sensors.

The central JUNKER CNC control concept

All entries and information pass through the Erwin Junker Operator Panel EJ-OP platform, a modern and high-performance controller with colour monitor and integrated PC.

JUWOP/W software

The interaction of the machine axes and the controller in combination with the software package JUWOP/W offers the best prerequisites for optimum precision machining of tools.

- Programming of tools and grinding wheels
- Definition of machining tasks on the tool
- Calculation of grinding wheel profiles
- Simulation in 3D (JUWOP/VG)

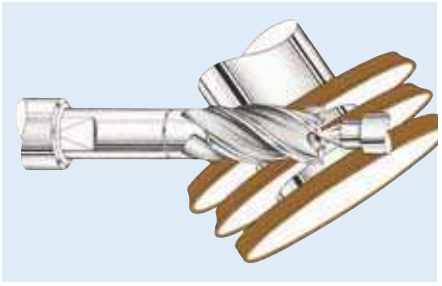

Grinding of flutes

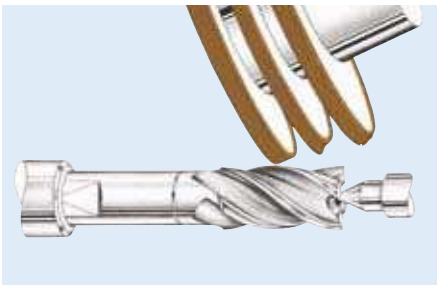

Grinding of body relief

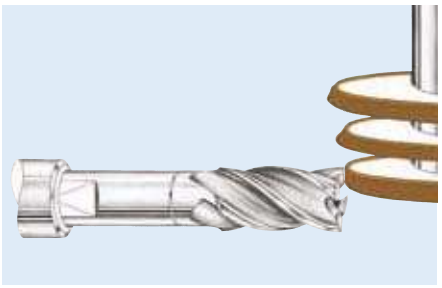

Grinding of end teeth

Open interface for automation

The new JUNKER Evolution² machine concept now also featured in the TOOLTEC division:
Higher availability and reduced operating costs thanks to the JUNKER platform strategy.

Your advantages in the field of automation:

- The open interface permits free selection of the automation system
- Optional application of the JUNKER system or of any other non-JUNKER makes
- Universally compatible internal JUNKER loading system (keyhole solution)
- Possible transport systems: pallets, cassettes, JUNKER magazine discs

Technical data

Dimensions (without accessories)

Width x depth x height: 3,460 x 2,665 x 2,050 mm

Machine weight: approx. 8,000 kg

Workpiece data	
Workpiece cutting diameter (standard):	10 - 32 mm
Workpiece cutting diameter (optional):	6 - 20 mm*
Workpiece length:	50 - 250 mm
Grinding length:	max. 200 mm
Spiral offset:	programmable
Grinding spindle swivel:	max. 53° left / max. 90° right
Division, relief size, conicality:	programmable
The CNC axes	
Workpiece rotary motion:	C-axis
Horizontal infeed:	X-axis
Vertical infeed:	Y-axis
Axial feed:	Z-axis
Grinding spindle swivel:	A-axis
Grinding data	
Grinding type:	High-speed grinding
Drive rating of grinding spindles:	20 kW (11 kW optional)
Abrasive:	Corundum, CBN or diamond
Number of grinding wheels:	max. 4
Diameter of grinding wheel min. / max.:	175 mm / 250 mm (120 mm / 200 mm optional*)
Bore diameter, grinding wheel:	76 mm (50,8 mm optional*)
Width per grinding wheel:	max. 25 mm (max. 16 mm optional*)
Width of grinding wheel package:	max. 120 mm (max. 90 mm optional*)
Peripheral speed of grinding wheel:	programmable per grinding operation

* in case of 11 kW grinding spindle

JUNKER
partner for precision

EUROPE

JUNKER Maschinen

Erwin Junker
Maschinenfabrik GmbH
Junkerstraße 2
77787 Nordrach
Germany

Phone: +49 (0)7838 84-0
Fax: +49 (0)7838 84-302
E-Mail: info@junker.de
www.junker-group.com

JUNKER Grinding Technology

Erwin Junker
Grinding Technology Mělník Ltd.
Sokolovská 68/105
18600 Praha 8-Karlín
Czech Republic

Phone: +420 2 24890610
Fax: +420 2 24818244
E-Mail: info@junker.cz
www.junker-group.com

JUNKER BSH Machines

BSH Holice Ltd.
Pardubická 332
53413 Holice
Czech Republic

Phone: +420 466 003111
Fax: +420 466 682149
E-Mail: info@junker.cz
www.junker-group.com

EUROPE

JUNKER Machines Outils

JUNKER France
13 rue Camille-Desmoulins
92441 Issy Les Moulineaux Cedex
France

Phone: +33 (0)1 58042781
Fax: +33 (0)1 58042300
E-Mail: info@junker-france.com
www.junker-group.com

JUNKER Machine Tools

Junker Machine Tools &
Technology (UK) Ltd.
Hadleigh House
32 Sefton Road, Fulwood Park
Sheffield S10 3TP
U.K.

Phone: +44 (0)114 2303453
Fax: +44 (0)114 2309382
E-Mail: info@junker-group.co.uk
www.junker-group.com

NORTH AMERICA

ERWIN JUNKER
High Performance Grinding Systems

Erwin Junker
Machinery Inc.
1524 Davis Road
Elgin, IL 60123
USA

Phone: +1 847 488 0406
Fax: +1 847 488 0436
E-Mail: info@junker-usa.com
www.junker-usa.com

ASIA

JUNKER Maschinen

Erwin Junker Maschinenfabrik GmbH
Shanghai Representative Office
Rm. G. H, 11 Floor, North Gate Plaza
No.99 Tianmu Road West
Shanghai 200070
P.R. China

Phone: +86 (0)21 63806911
Fax: +86 (0)21 63806955
E-Mail: info@junker.com.cn
www.junker.com.cn

JUNKER Maschinen

Erwin Junker Maschinenfabrik GmbH
Beijing Representative Office
Rm. 1606 Liye Building
No.71 Majiapu Road East, Fengtai Dist.
Beijing 100068
P.R. China

Phone: +86 (0)10 51165066
Fax: +86 (0)10 51165022
E-Mail: info@junker.com.cn
www.junker.com.cn

We reserve the right to make changes that serve technical progress.

8.31619 E 0607

JUNKER
partner for precision

JUMINIMAT

High-precision complete grinding

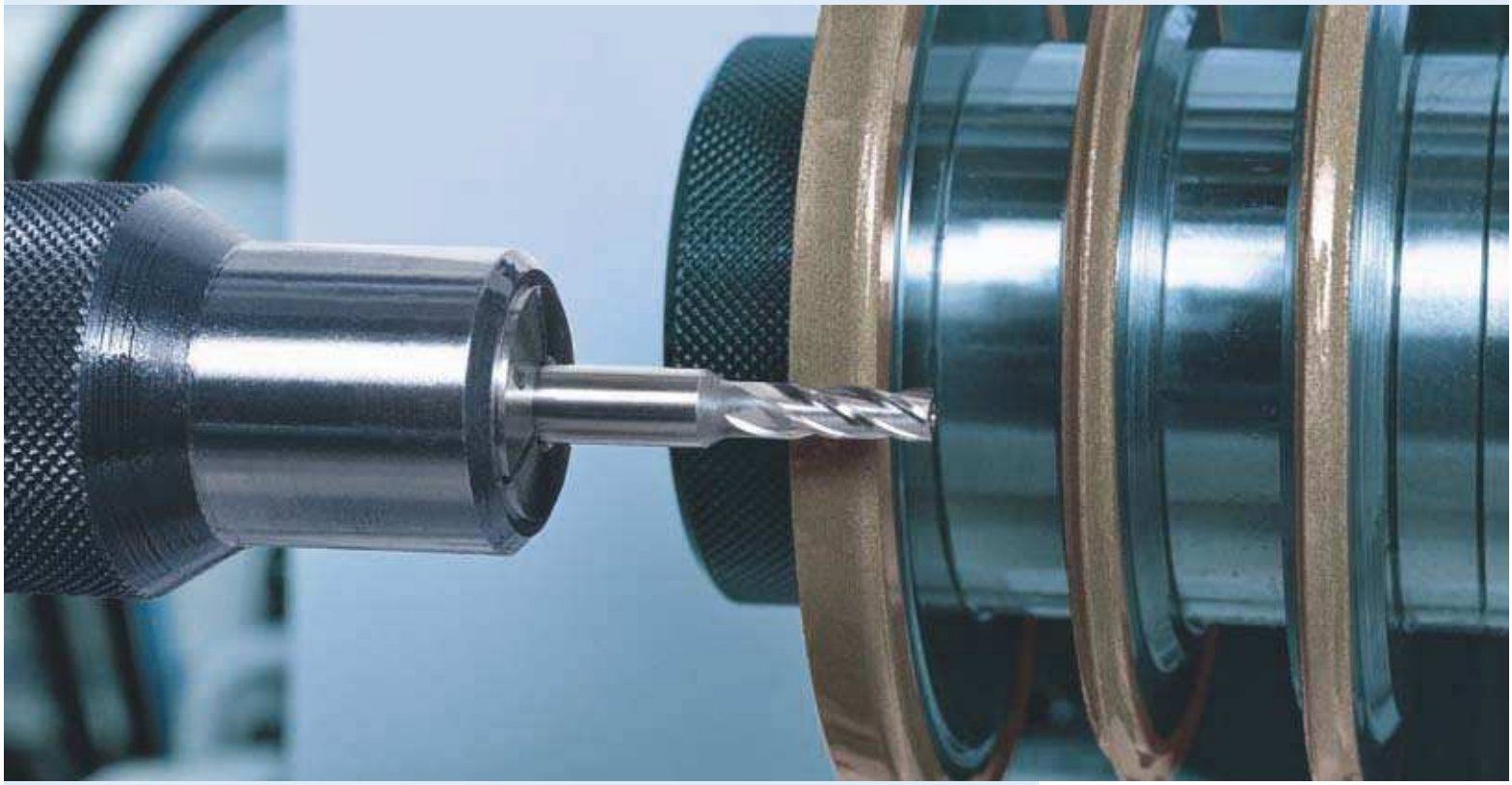

JUMINIMAT

Flexible and precise

High performance in all applications

JUMINIMAT – the machine concept with integrated loading system for the flexible and productive complete machining of high-precision cutting tools.

The following cutting tools (diam. 1 - 8 mm) made from HSS or HM can be machined with the JUMINIMAT:

End mills, die-sinking cutters, roughing mills, 1-tooth milling cutters, reamers, tap drills, counterbore, wood borers and wood

Technology with no ifs or buts

These precision tools are fully machined from solid blanks. The tools are ground either unsupported or with tailstock support. If necessary a swivelling steady rest can be used for support. Corundum or CBN grinding wheels in the case of HSS tools or diamond grinding wheels in the case of tungsten carbide tools are used as abrasives.

Up to 4 grinding wheels can be mounted on the grinding spindle. The wheelhead can be swivelled to the left by 53° and by 105° to the right.
The height and horizontal adjustment, as well as the axial infeed of the grinding wheels and the swivel movements and

Your advantages

- Complete machining of the entire tooth geometry in one clamping
- Grinding of a very wide range of cutting tools to a very high degree of precision
- High flexibility thanks to reduced retooling times
- All relief angles of thr surface bezels are freely programmable. Only one wheel required
- Grinding of high-speed materials, tungsten carbide as well as ceramics up to 8.0 mm diameter from solid blanks

Impressive: the integrated dressing system

The swivelling dressing system allows the profiling / dressing of grinding wheels in the machine in a fully-automatic cycle. The dressing process is monitored using impact sound approach sensors.

The central JUNKER CNC control concept

All entries and information pass through the Erwin Junker Operator Panel EJ-OP platform, a modern and high-performance controller with colour monitor and integrated PC.

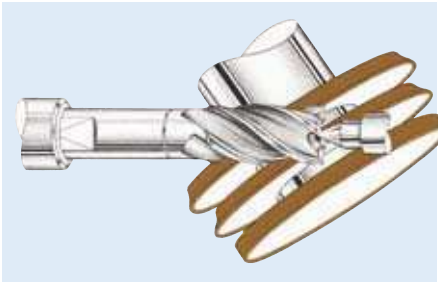

Grinding of flutes

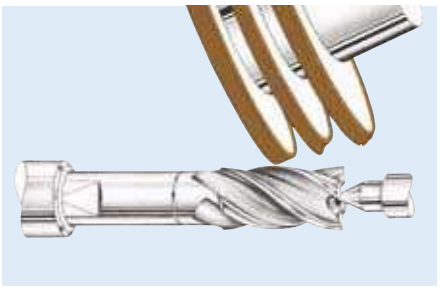

Grinding of body relief

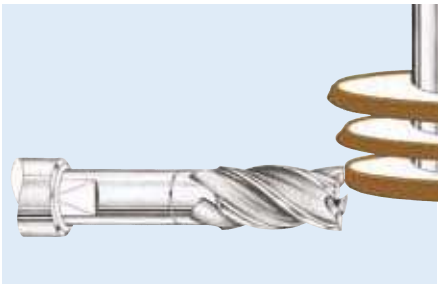

Grinding of end teeth

JUWOP/W software

The interaction of the machine axes and the controller in combination with the software package JUWOP/W offers the best prerequisites for optimum-precision machining of tools.

- Programming of tools and grinding wheels
- Definition of machining processes on tool
- Calculation of grinding wheel profiles
- Simulation in 3D (JUWOP/VG)

Technical data

Dimensions (without accessories)

Width x depth x height: 3,273 x 3,008 x 2,100 mm

Machine weight: approx. 2,800 kg

Workpiece data	
Workpiece shaft diameter (standard):	1 - 8 mm
Workpiece cutting diameter (max.):	max. 8,0 mm
Workpiece length:	max. 105 mm
Grinding length:	max. 50 mm
Spiral offset:	programmable
Grinding spindle swivel:	max. 53° left / max. 105° right
Division, relief size, conicality:	programmable
The CNC axes	
Workpiece rotary motion:	C-axis
Horizontal infeed:	X-axis
Vertical infeed:	Y-axis
Axial feed:	Z-axis
Grinding spindle swivel:	A-axis
Grinding data	
Grinding type:	High-speed grinding
Drive rating of grinding spindles:	3 kW
Abrasive:	Corundum, CBN or diamond
Number of grinding wheels:	max. 4
Diameter of grinding wheel:	max. 90 mm (max. 100 mm optional)
Bore diameter of grinding wheel:	32 mm
Width per grinding wheel:	max. 10 mm
Width of grinding wheel package:	max. 45 mm
Peripheral speed of grinding wheel:	programmable per grinding operation

JUNKER
partner for precision

EUROPE

JUNKER Maschinen

Erwin Junker
Maschinenfabrik GmbH
Junkerstraße 2
77787 Nordrach
Germany

Phone: +49 (0)7838 84-0
Fax: +49 (0)7838 84-302
E-Mail: info@junker.de
www.junker-group.com

JUNKER Grinding Technology

Erwin Junker
Grinding Technology Mělník Ltd.
Sokolovská 68/105
18600 Praha 8-Karlín
Czech Republic

Phone: +420 2 24890610
Fax: +420 2 24818244
E-Mail: info@junker.cz
www.junker-group.com

JUNKER BSH Machines

BSH Holice Ltd.
Pardubická 332
53413 Holice
Czech Republic

Phone: +420 466 003111
Fax: +420 466 682149
E-Mail: info@junker.cz
www.junker-group.com

EUROPE

JUNKER Machines Outils

JUNKER France
13 rue Camille-Desmoulins
92441 Issy Les Moulineaux Cedex
France

Phone: +33 (0)1 58042781
Fax: +33 (0)1 58042300
E-Mail: info@junker-france.com
www.junker-group.com

JUNKER Machine Tools

Junker Machine Tools &
Technology (UK) Ltd.
Hadleigh House
32 Sefton Road, Fulwood Park
Sheffield S10 3TP
U.K.

Phone: +44 (0)114 2303453
Fax: +44 (0)114 2309382
E-Mail: info@junker-group.co.uk
www.junker-group.com

NORTH AMERICA

ERWIN JUNKER
High Performance Grinding Systems

Erwin Junker
Machinery Inc.
1524 Davis Road
Elgin, IL 60123
USA

Phone: +1 847 488 0406
Fax: +1 847 488 0436
E-Mail: info@junker-usa.com
www.junker-usa.com

ASIA

JUNKER Maschinen

Erwin Junker Maschinenfabrik GmbH
Shanghai Representative Office
Rm. G. H, 11 Floor, North Gate Plaza
No.99 Tianmu Road West
Shanghai 200070
P.R. China

Phone: +86 (0)21 63806911
Fax: +86 (0)21 63806955
E-Mail: info@junker.com.cn
www.junker.com.cn

JUNKER Maschinen

Erwin Junker Maschinenfabrik GmbH
Beijing Representative Office
Rm. 1606 Liye Building
No.71 Majiapu Road East, Fengtai Dist.
Beijing 100068
P.R. China

Phone: +86 (0)10 51165066
Fax: +86 (0)10 51165022
E-Mail: info@junker.com.cn
www.junker.com.cn

We reserve the right to make changes that serve technical progress.

8.31617 E 0607

Three service sections, one objective: satisfied customers

ASSIST Services
Optimisation and extension

Retrofit Services are services provided by Assist Services. They include sales of JUNKER used machines, as well as service contracts and extended guarantee periods. Our intensive and individual consultancy forms the basis for your success here.

TRAIN Services
Training and courses

The objective: quick installation, safe operation and efficient production. How it's done: special training and courses for users, programmers, maintenance staff and the customer's service personnel, provided by Train Services.

MAINTAIN Services
Maintenance and service parts

A sophisticated maintenance concept is the key to high productivity. By carrying out preventive and reactive services in Maintain Services, we ensure the maximum availability of your JUNKER machines over the course of many years.

Globally present, locally active

- **Service Centre Europe** in Nordrach, Germany
- **Service Centre Eastern Europe** in Mělník, Czech Republic
- **Service Centre BSH machines** in Holice, Czech Republic
- **Service Centre Asia** in Shanghai, China
- **North American Service Centre** in Chicago, USA

Erwin Junker
Maschinenfabrik GmbH
Junkerstraße 2
77787 Nordrach
Germany

Phone: +49 (0)7838 84-0
Fax: +49 (0)7838 84-305
E-Mail: services@junker.de
www.junker-group.com

8.31632 D 0806 We reserve the right to make changes that serve technical progress. www.marschner-kuehn.de

JUNKER
partner for precision

JUPITER

Centerless cylindrical grinding

JUPITER 250

JUPITER 500

Outstanding productivity: Centerless cylindrical grinding

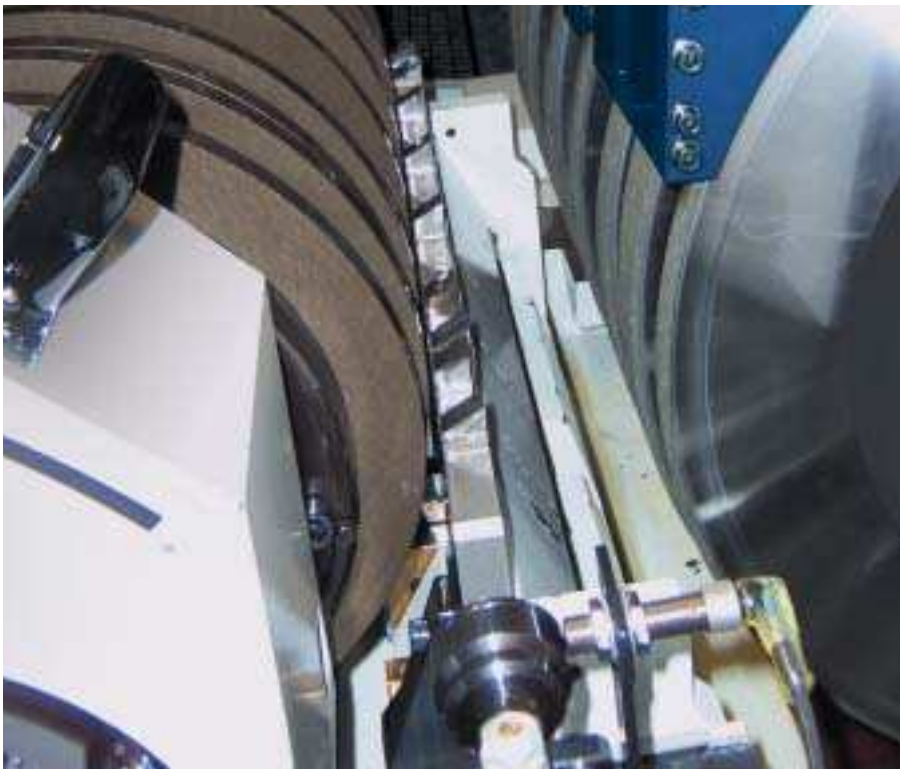

Efficiency across the board

At JUPITER, grinding means centerless cylindrical grinding, with CBN too on request. JUNKER combines this cylindrical grinding method with CBN wheels to create significant productivity advantages, especially with large batch sizes. This is coupled with simultaneous abrasion along the entire grinding wheel width, which ensures much reduced machining times for both large and small-scale standard production.

Centerless grinding with a "workpiece on the fly"

Centerless grinding involves the workpiece being simultaneously machined and guided on its generated surface. The line contact on a grinding wheel forms the grinding line, the workpiece lies flush with the regulating wheel and is held in place from below by a guide rail.
During grinding, the center of the workpiece lowers as its diameter is reduced through abrasion. This causes the workpiece to migrate towards the regulating wheel. JUNKER's electronic control system compensates for this position change by tracking the grinding wheel so that precise machining is guaranteed at all times. Centerless cylindrical grinding is also the ideal solution for workpieces that are difficult to hold due to their shape or small dimensions.

Through feed grinding

The less complex method of centerless grinding is through feed grinding. This process involves a continuous sequence of workpieces passing through the machine, whereby all workpieces have only one uniform ground diameter. The axial force of the regulating wheel, which is typically angled by 1.5-3.5° "pulls" the workpieces between the wheels and towards the end of the grinding cell. Aided by an automated loading and unloading system, the workpieces pass continuously through the machine.

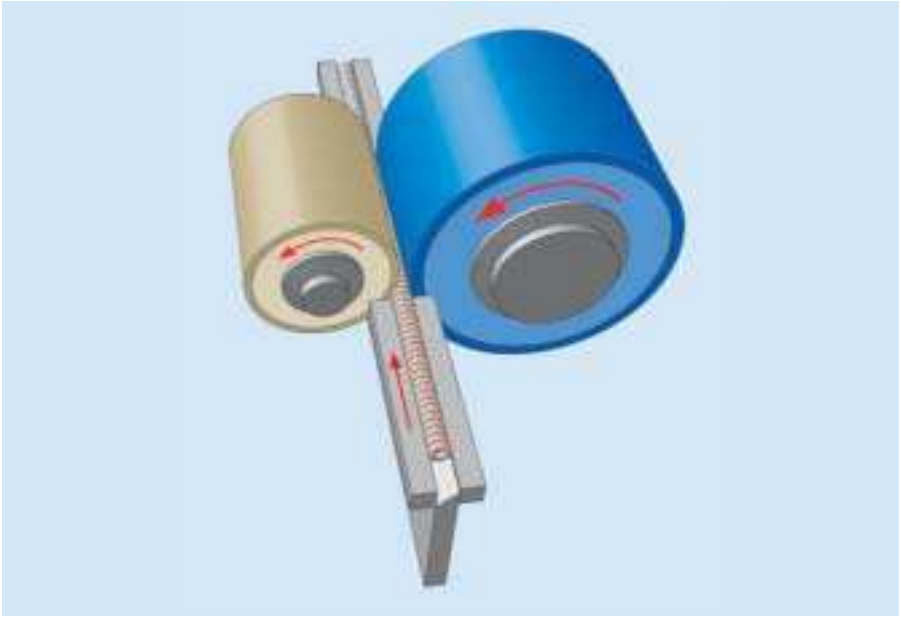

Through feed grinding: A workpiece flow passes through the machine

Through feed grinding applications

- Bolts and bearing supports
- Large rings
- Small rings
- Piston parts (e.g. for compressors)
- Shafts with consistent diameters
- Piston rods (e.g. for shock absorbers)
- Small pistons for hydraulic and injection systems
- Precision wires and rods
- Piston bolts

Plunge-cut grinding

With plunge-cut grinding, both the grinding wheel and the regulating wheel show the "negative profile" of the workpiece.

This enables all the diameters on one workpiece to be ground at the same time. An axial stop on the guide rail, also profiled, guarantees the correct workpiece position. Plunge-cut grinding is only economical for very large-scale standard production, as retooling is relatively complex due to having to change and dress both wheels and change the guide rail. However, JUNKER offers an effective retooling concept which drastically reduces time input thanks to automated grinding wheel change and hydraulically clamped guide rails. Loading and unloading typically occurs from the top via an integrated loading portal.

Plunge-cut grinding: Simultaneous grinding of various diameters

Plunge-cut grinding applications

- Rotor shafts
- Gearbox components
- Camshaft bearings surfaces
- Pipe components for composite camshafts
- Cardan joints
- Needle components for injection systems
- Valve shanks
- Tonne rollers

Unique benefits thanks to JUNKER technology

Cost benefits

- Very high abrasion rate
- Simultaneous grinding of various diameters (plunge-cut grinding)
- Automatic loading and unloading with integrated loading system (plunge-cut grinding)
- Automatic passage of a workpiece flow (through feed grinding)
- High utilization ratio with CBN abrasive and emulsion or oil as cooling lubricant
- Dressing device and dressing process to meet the requirements
- Extensive after sales service

Technical benefits

- Increased productivity through taper correction: Regulating wheel can be re-indexed in the event of uneven wear on the grinding wheel. This allows an increase in the number of cycles before the next dressing cycle.
- Machine's full protection cover opens on both sides and is pre-fitted for connection to a grinding mist extractor
- Vibration-free torque transfer to the grinding spindle through installation of the main spindle drive outside of the machine

Centerless + CBN = JUNKER

JUPITER grinding machines achieve unprecedented economy through the combination of "centerless cylindrical grinding" and "CBN" technologies. This is because JUNKER is able to implement its existing lead attained through use of CBN technology across the entire width of the grinding wheel into a productivity benefit.

Safety through experience

Many satisfied customers understand the value of the extensive test facilities in the JUNKER Technology Center, as well as the expertise for integrating grinding machines into production line chains and implementing turnkey solutions.

Every customer receives its individually equipped JUPITER system with loading system, from mainly manual to fully-automatic, including sorting station and buffer unloading.

The key JUNKER CNC control concept

An open system

The concept: central control technology for all grinding machine components. All inputs and data run via the EJ-OP Erwin Junker operator panel. On JUPITER machines, this panel is the user interface for a Siemens Sinumerik 840D CNC controller.

Start-up: simple and safe

The JUNKER hardware and software concept significantly reduces installation input for its cylindrical grinding machines. Special software tools are used to ensure safe and gradual start-up.

Teleservice: swift and efficient

The first port of call for all questions and problems are the staff at JUNKER Service. All data available on the machine's status can be analysed online as required. This JUNKER service increases system availability, thus keeping service costs low.

The benefits of the hardware and software concept

- All components accessible via Teleservice
- Identical operation of different machines, irrespective of the controller used
- Standardised operator interface for all components
- Automatic data backup, including the settings for all externally purchased assemblies

EJ-OP operator panel: standard for all machines

- Graphic display of interactive processes during programming and operation
- Reduced training requirement
- Minimised risk of maloperation
- Swift retooling and set-up
- All machining parameters stored
- Machine programming, offline if desired, e.g. in the engineering department

Erwin Junker operator panel EJ-OP

Basic screen with operating parameters

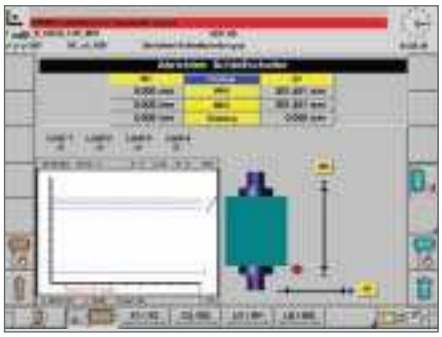

Dressing with contact monitoring

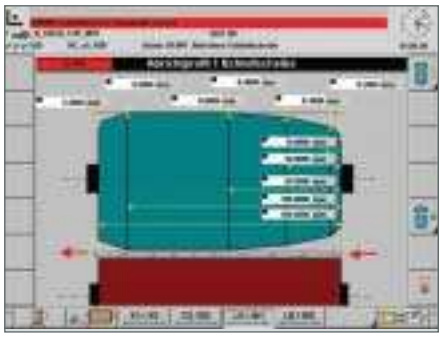

Clear grinding wheel profiling

More options to enhance your productivity

Cast iron design with angeled bed concept

With JUPITER centerless cylindrical grinding machines, the middle axis of regulating wheel, workpiece and grinding wheel lie on an ascending line.
This arrangement ensures that the workpiece is efficiently driven by the regulating wheel before the grinding wheel engages. Other benefits offered by the design: Most of the abrasive slurry flows through the inclined machine bed automatically, thus reducing the need for cleaning.

Flexible dressing system

Driven dressing wheel: rotating diamond roll

On JUPITER machines, the dressing operation (i.e. in set-up mode) can be run via an automatic dressing program with grinding wheel compensation. The dual-axle CNC dressing system for grinding and regulating wheels can also be a vertical dressing tool (needle fabric or needle plate) or for the grinding wheel a driven dressing wheel (rotating diamond roll). If the dressing wheel is selected, it can easily be replaced with a vertical dressing tool at a later date.

Regulating spindle and regulating spindle headstock

- Regulating spindle headstock mounted on guide slide bearings
- Double-sided antifriction mounting in precise spindle bearings
- Spindle drive (SP2 axis) via servo drive and toothed belt
- Drive power: torque 58 Nm
- Continuous speed: 1 - 800 rpm^{-1}
- The regulating wheel is directly positioned on the spindle body without flange and lifted out with the bearing
- Dressing unit with 2 CNC-controlled axles

Options

- Integrated, dynamic balancing system
- Cutting speed kept constant through grinding wheel drive control
- Post-process measuring control, for some applications also with dynamic roundness measurement
- Individual loading and unloading systems

Grinding spindle and grinding spindle headstock

- Double-sided antifriction mounting of grinding spindle in precise spindle bearings
- Zero vibration torque transfer via V-belts (main motor on separate console)
- Flangless spindle body grinding wheel is mounted directly to the spindle body and is taken out together with the bearing when the wheel is changed
- Automatic balancing unit
- Automatic central lubrication system
- 55 kW main drive power, 90 kW as an option
- Dressing unit with 2 CNC-controlled axles
- Automatic grinding wheel compensation after the dressing process

Efficient cooling

The cooling process for JUNKER centerless grinding is achieved with oil or emulsion cooling lubricant. At a reduced pressure of less than 3 bar, the minimum quantity coolant is selectively introduced through shoe nozzles into the grinding gap over the entire length of the workpiece. This guarantees adequate cooling using only a small amount of coolant.

Inclined bed design for perfect results

Technical data

Series	250	500
Length x width x height (incl. LTA air filter)	4410 x 2600 x 3200 mm	4410 x 2600 x 3200 mm
Length x width x height (excl. LTA air filter)	4410 x 2600 x 2330 mm	4410 x 2600 x 2330 mm
Machine weight	13,500 kg	15,000 kg
Max. grinding wheel width	250 mm (300 mm as option)	500 mm
Procedure		
Through feed	Yes	Yes
Plunge-cut	Yes	Yes
CNC-controlled axes	6 (8 as option)	6 (8 as option)

JUNKER
partner for precision

EUROPE

JUNKER Maschinen

Erwin Junker
Maschinenfabrik GmbH
Junkerstraße 2
77787 Nordrach
Germany

Phone: +49 (0)7838 84-0
Fax: +49 (0)7838 84-302
E-Mail: info@junker.de
www.junker-group.com

JUNKER Grinding Technology

Erwin Junker
Grinding Technology Mělník Ltd.
Sokolovská 68/105
18600 Praha 8-Karlín
Czech Republic

Phone: +420 2 24890610
Fax: +420 2 24818244
E-Mail: info@junker.cz
www.junker-group.com

JUNKER BSH Machines

BSH Holice Ltd.
Pardubická 332
53413 Holice
Czech Republic

Phone: +420 466 003111
Fax: +420 466 682149
E-Mail: info@junker.cz
www.junker-group.com

EUROPE

JUNKER Machines Outils

JUNKER France
13 rue Camille-Desmoulins
92441 Issy Les Moulineaux Cedex
France

Phone: +33 (0)1 58042781
Fax: +33 (0)1 58042300
E-Mail: info@junker-france.com
www.junker-group.com

JUNKER Machine Tools

Junker Machine Tools &
Technology (UK) Ltd.
Hadleigh House
32 Sefton Road, Fulwood Park
Sheffield S10 3TP
U.K.

Phone: +44 (0)114 2303453
Fax: +44 (0)114 2309382
E-Mail: info@junker-group.co.uk
www.junker-group.com

NORTH AMERICA

ERWIN JUNKER

High Performance Grinding Systems

Erwin Junker
Machinery Inc.
1524 Davis Road
Elgin, IL 60123
USA

Phone: +1 847 488 0406
Fax: +1 847 488 0436
E-Mail: info@junker-usa.com
www.junker-usa.com

ASIA

JUNKER Maschinen

Erwin Junker Maschinenfabrik GmbH
Shanghai Representative Office
Rm. G. H, 11 Floor, North Gate Plaza
No.99 Tianmu Road West
Shanghai 200070
P.R. China

Phone: +86 (0)21 63806911
Fax: +86 (0)21 63806955
E-Mail: info@junker.com.cn
www.junker.com.cn

JUNKER Maschinen

Erwin Junker Maschinenfabrik GmbH
Beijing Representative Office
Rm. 1606 Liye Building
No.71 Majiapu Road East, Fengtai Dist.
Beijing 100068
P.R. China

Phone: +86 (0)10 51165066
Fax: +86 (0)10 51165022
E-Mail: info@junker.com.cn
www.junker.com.cn

Modifications for the sake of technical improvement reserved.

8.30771 E 0805

JUNKER
partner for precision

PLATEMAT

Machining of the outer contour on cutting inserts

PLATEMAT

New and unique: Machining indexable inserts in one clamping

Four interpolating axes

The JUNKER PLATEMAT new development is a unique system for machining the external profile and negative chamfer on indexable inserts in one clamping. Four interpolating axes carry out the various grinding operations with the utmost precision and reliability. Thus, a multitude of CNC-controlled radius and relief angle variations are realisable, e.g.

- Constant radius
- Constant relief angle
- Variable relief angle

High quality in a short time.

The absolutely new type of machining technology makes a reduction of the production time by up to 50% possible. Thus, JUNKER provides the maximum productivity for the mass production of indexable inserts. PLATEMAT also produces a cutting edge quality which has not been achievable up to now.

Realisable indexable inserts geometries

- Triangular
- Rectangular
- Square
- Rhomboid
- Hexagonal
- Circular

PLATEMAT: Convincing benefits

- Highly productive due to extremely short machining time and extremely fast workpiece change
- Utmost precision due to high resolution CNC drives
- Maximum cutting edge quality due to unique grinding technology
- Maximum availability using 3D simulation (JUWOP/VG)
- Including JUNKER automation system

The central JUNKER CNC control concept

All inputs and data run via the Erwin Junker "EJ-OP Operator Panel" control platform developed by JUNKER. A modern and high-performance controller with colour monitor and integrated PC.

JUWOP/SG software

The interaction of the machine axes and the controller in combination with the JUWOP/SG software package provides the best prerequisites for maximum precision machining of indexable inserts.

- Programming workpiece profiles
- Definition of grinding operations on the indexable inserts
- Calculation of the CNC grinding program
- Simulation in 3D (JUWOP/VG)

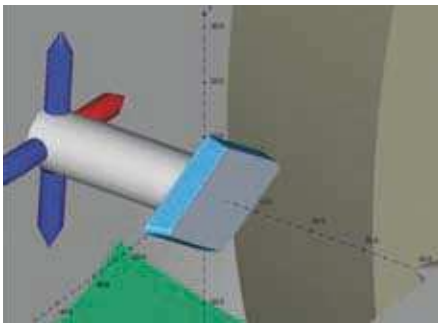

3D simulation of the machining with JUNKER JUWOP/VG

Technical data

Dimensions (incl. automation system)

Width x depth x height: 2,900 x 3,200 x 2,000 mm

Machine weight: approx. 8,000 kg

	PLATEMAT 1000/20	PLATEMAT 1000/50
Ø inscribed circle	min. 5 mm	min. 5 mm
Ø circumscribed circle	max. 70 mm	max. 70 mm
Ø bore	2.1 - 15 mm	2.1 - 15 mm
Strengthworkpiece	3 - 15 mm	3 - 15 mm
Weight	1 - 200 g	1 - 200 g
B-axis	Grinding spindle swivel	Grinding spindle swivel
C-axis	Workpiece rotary motion	Workpiece rotary motion
X-axis	Horizontal infeed	Horizontal infeed
Z-axis	Axial feed	Axial feed
Number of grinding spindles	1	2
Grinding spindles power	12 kW	12 kW
Grinding wheels diameter	350 mm	350 mm

JUNKER
partner for precision

EUROPE

JUNKER Maschinen

Erwin Junker
Maschinenfabrik GmbH
Junkerstraße 2
77787 Nordrach
Germany

Phone: +49 (0)7838 84-0
Fax: +49 (0)7838 84-302
E-Mail: info@junker.de
www.junker-group.com

JUNKER Grinding Technology

Erwin Junker
Grinding Technology Mělník Ltd.
Sokolovská 68/105
18600 Praha 8-Karlín
Czech Republic

Phone: +420 2 24 89 06 10
Fax: +420 2 24 81 82 44
E-Mail: info@junker.cz
www.junker-group.com

JUNKER BSH Machines

BSH Holice Ltd.
Pardubická 332
53413 Holice
Czech Republic

Phone: +420 466 00 31 11
Fax: +420 466 68 21 49
E-Mail: info@junker.cz
www.junker-group.com

EUROPE

JUNKER Machines Outils

JUNKER France
13 rue Camille-Desmoulins
92441 Issy Les Moulineaux Cedex
France

Phone: +33 (0)1 58042781
Fax: +33 (0)1 58042300
E-Mail: info@junker-france.com
www.junker-group.com

JUNKER Machine Tools

Junker Machine Tools &
Technology (UK) Ltd.
Hadleigh House
32 Sefton Road, Fulwood Park
Sheffield S10 3TP
U.K.

Phone: +44 (0)114 230 34 53
Fax: +44 (0)114 230 93 82
E-Mail: info@junker-group.co.uk
www.junker-group.com

NORTH AMERICA

ERWIN JUNKER
High Performance Grinding Systems

Erwin Junker
Machinery Inc.
1524 Davis Road
Elgin, IL 60123
USA

Phone: +1 847 488 0406
Fax: +1 847 488 0436
E-Mail: info@junker-usa.com
www.junker-usa.com

ASIA

JUNKER Maschinen

Erwin Junker Maschinenfabrik GmbH
Shanghai Representative Office
Rm. G. H, 11 Floor, North Gate Plaza
No.99 Tianmu Road West
Shanghai 200070
P.R. China

Phone: +86 (0)21 63 80 69 11
Fax: +86 (0)21 63 80 69 55
E-Mail: info@junker.com.cn
www.junker.com.cn

JUNKER Maschinen

Erwin Junker Maschinenfabrik GmbH
Beijing Representative Office
Rm. 1606 Liye Building
No.71 Majiapu Road East, Fengtai Dist.
Beijing 100068
P.R. China

Phone: +86 (0)10 51 16 50 66
Fax: +86 (0)10 51 16 50 22
E-Mail: info@junker.com.cn
www.junker.com.cn

We reserve the right to make changes that serve technical progress. Marschner+Kühn

8.31629 E 0906

Inner gantry system PLS for series 1000

Consisting of:

- Inner gantry system with angle-style gripper
  - Gantry carrier with NC controlled longitudinal axis
  - Vertical unit pneumatically controlled
  - Double gripper with pneumatic swivel unit 90°
- Outer workpiece providing unit
  - Shifting unit NC controlled
  - Tranfer unit with gripper and swivel unit
  - With NC controlled longitudinal axis and pneumatic stroke and swivel movements
  - Enclosure around loading device with loading gate
  - Control part with drive motors integrated with machine control

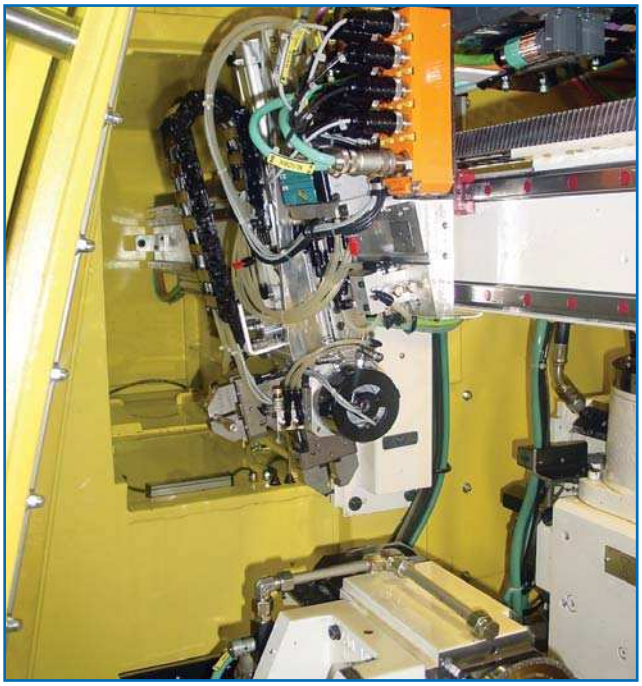

Erwin Junker
Maschinenfabrik GmbH
Junkerstraße 2
77787 Nordrach
Germany

Phone: +49 (0)7838 84-0
Fax: +49 (0)7838 84-302
E-Mail: info@junker.de
www.junker-group.com

8.30728 E 0404

JUNKER
partner for precision

QUICKPOINT

Everything in One Clamping

QUICKPOINT 1000
QUICKPOINT 3000
QUICKPOINT 5000

Efficiency Brought to a Point

High-performance Grinding

QUICKPOINT's great advantage: This technology can be used for a wide range of applications in combination and combines this with extremely high productivity. Compared with conventional OD grinding - especially when grinding Tungsten Carbide - the QUICKPOINT method can increase productivity by up to 600%!

The QUICKPOINT Concept

QUICKPOINT grinding is a high-speed "peel grinding" process based on point contact between grinding wheel and workpiece. The QUICKPOINT process requires highly wear resistant CBN or diamond grinding wheels which are typically only a couple of millimeters wide. Tilting the abrasive wheel to the horizontal workpiece axis creates a relief angle that reduces the contact zone between abrasive wheel and workpiece from a contact line to a contact point.

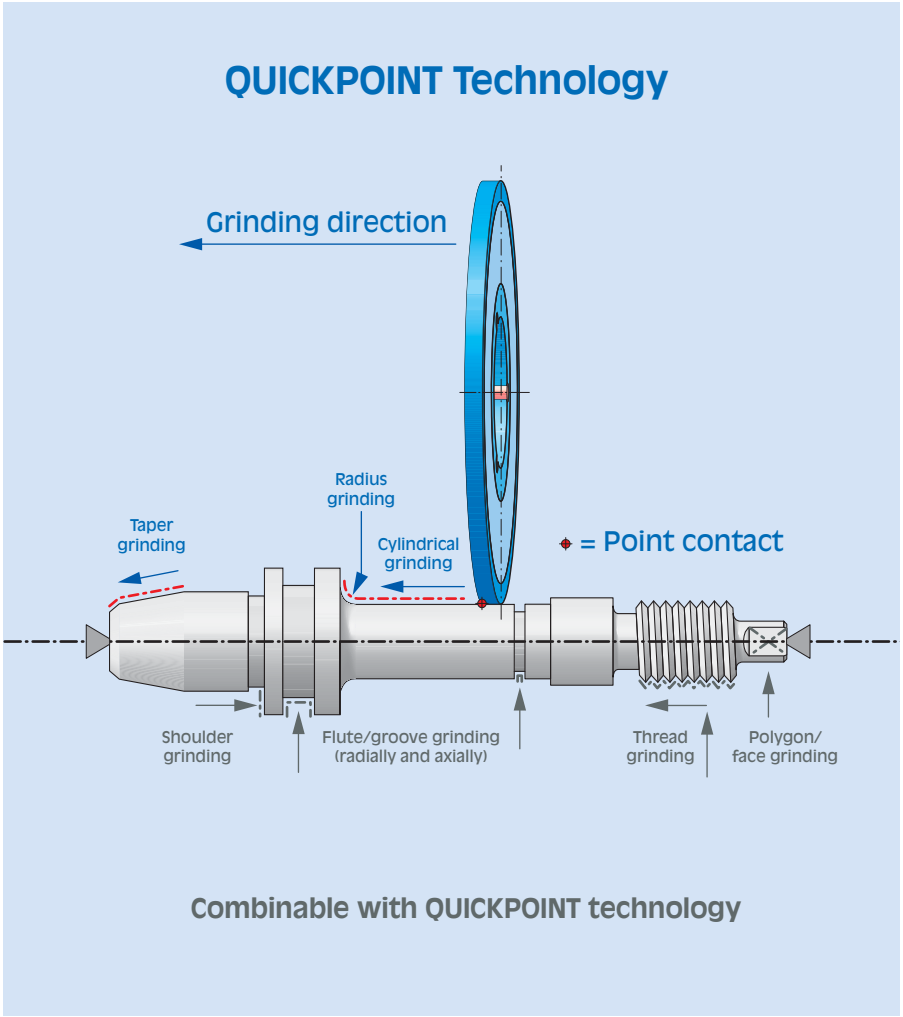

Complete Machining in one Clamping

By integrating modified JUNKER grinding modules with several grinding wheels, QUICKPOINT machines can be enhanced for complete machining. This makes it possible for instance to plunge grind, thread grind, contour grind, and eccentric grind components in just one clamping.

Economic Benefits:

- Great investment savings due to lean production: Almost all workpiece contours can be ground by just one abrasive wheel in a single clamping
- Direct downloading of the workpiece contour by software
- Improved productivity of 88-95%, that is 3-8% higher than conventional methods
- Improved productivity by finish grinding in just one clamping
- Simplified logistics: no reclamping, no secondary operations on various machines
- Low tool costs because of long tool life
- Improved production security and flexibility from individual machines instead of a production line
- Low set-up times, because no driver is required

Technical Advantages:

- High flexibility: for shoulders, tapers, chamfers, grooves, undercuts, threads, faces and polygonal surfaces
- High grinding speeds due to good all-around cooling of the active grinding point
- Quality improvement by complete grinding in one clamping
- Complete grinding including both ends of the workpiece (because grinding is done without driver)
- High surface quality

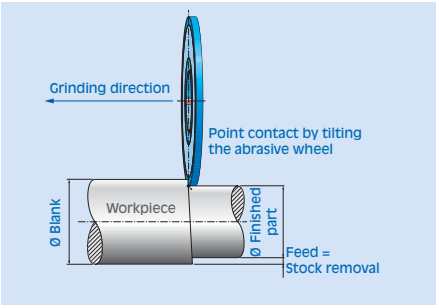

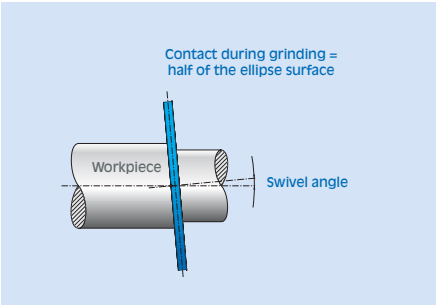

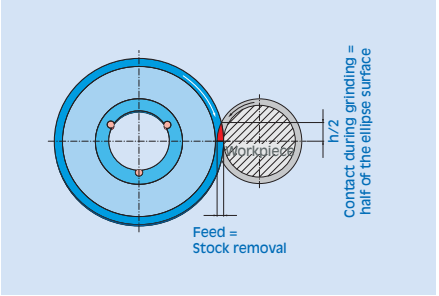

Flexibility and Performance for any Application

QUICKPOINT for all Industries

- Automotive inclustry and sub-suppliers
- Precision tool industry
- Gear manufacturing
- Machine tool manufacturing
- Textile machine manufacturing
- Printing machine manufacturing
- Electrical engineering industry
- Carbide and ceramics processing

Versatility that Pays Off

The three basic QUICKPOINT models with up to five wheelhead combinations provide cylindrical grinding solutions for practically any application: from the compact QUICKPOINT 1000 for small parts and broad variety of parts up to the QUICKPOINT 5000 for mass production. Wherever a QUICKPOINT grinds, it guarantees a cost-optimised production process. Some typical workpieces include combustion engine valves, camshafts, transmission shafts, drive shafts, pump shafts, etc.

Wheelhead Versions (schematic representation)

The QUICKPOINT cylindrical grinders are, depending on the model, available with different wheelhead configurations. The grinding applications are almost unlimited due to the large variety of different wheel heads (please refer to page 10).

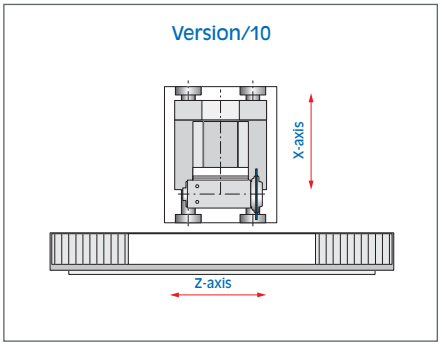

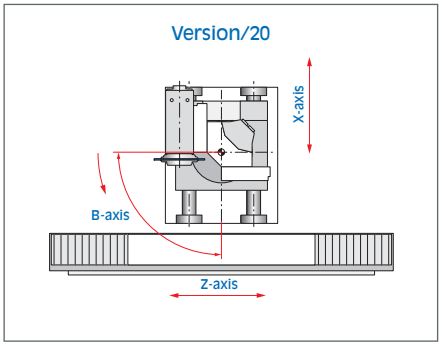

Overview of Materials and Operations:

Practically all materials and material combinations can be ground by using the QUICKPOINT method: steel, aluminum, tungsten carbide, industrial ceramics, powdered metal, plastics, glass.
In combination with other JUNKER technologies the machines of the QUICKPOINT series can also grind faces, polygonal surfaces, undercuts, and threads.

Standard grinding operations with QUICKPOINT:
- Shoulders
- Tapers
- Chamfers
- Grooves

For the Automotive Industry: High Productivity

Mass production calls for high performance - QUICKPOINT's complete machining in one clamping even adds flexibility. Thus QUICKPOINT makes lean production possible and dispenses with investments in inflexible special machines.

For General Application: High Flexibility

QUICKPOINT is the ideal solution also for small companies and sub-contractors with frequently changing jobs. For QUICKPOINT can be retooled quickly, is versatile in application, and by individual adjustments always provides the right performance.

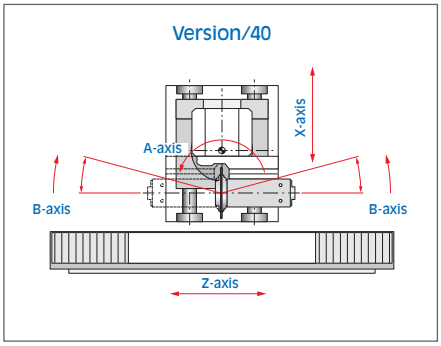

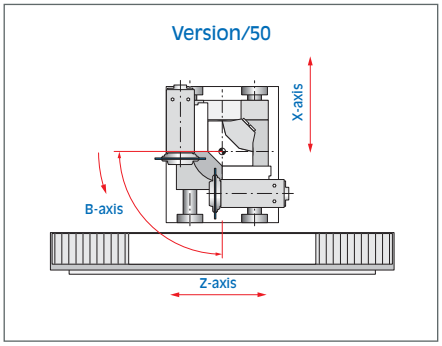

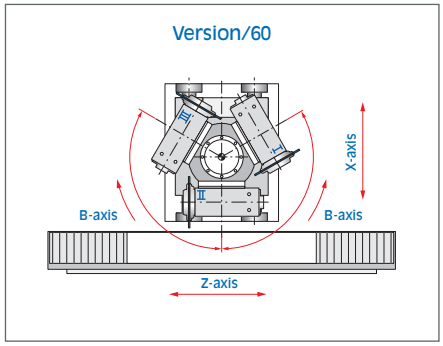

You can Rely on this Engineering

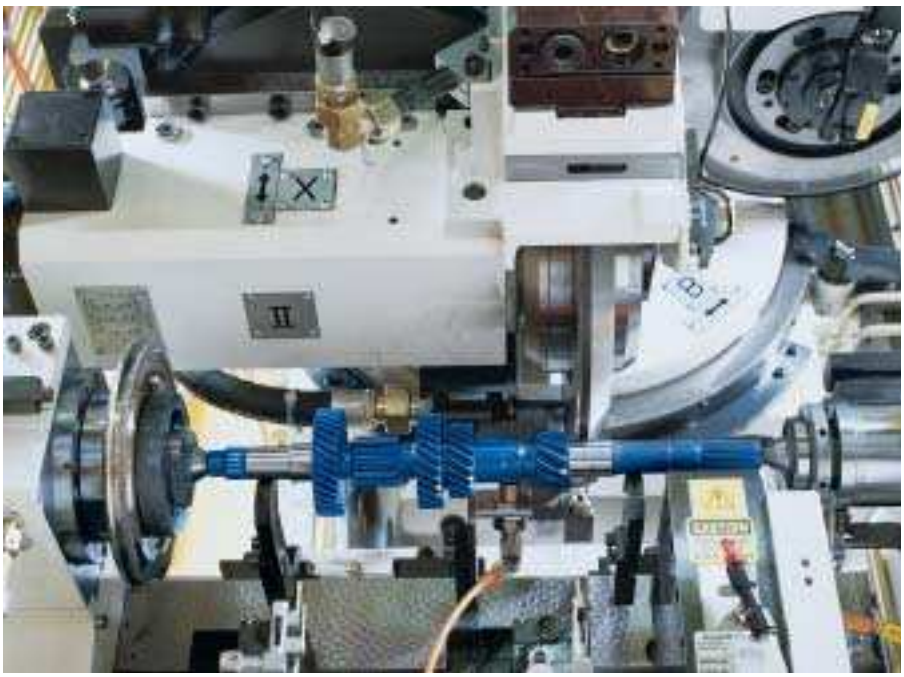

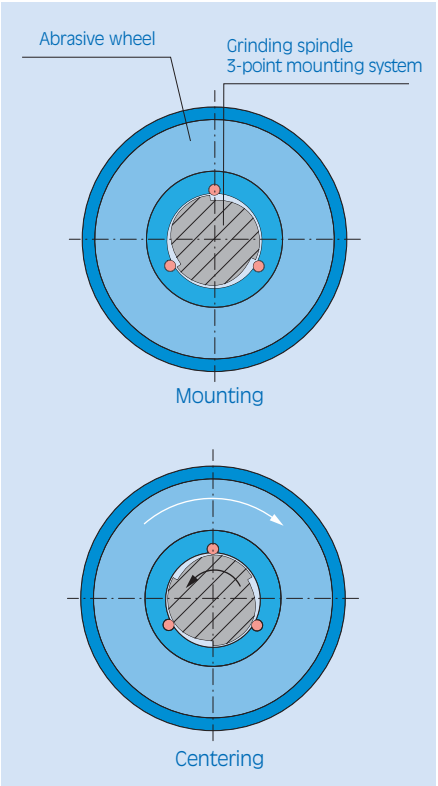

Abrasive wheel mount:
3-point mounting system (also suitable for abrasive wheels without standard collar)

Stable and Compact: the machine base

For dynamic and high-precision machining processes: a machine base filled with polymer concrete.

- Extremely vibration reducing
- High torsional rigidity
- Main axes X and Z are directly installed on the machine base

Quick Changeover for Short Downtimes

3-point mounting system

This system is used at the wheelhead, the workhead and the tailstock and thus shortens the retooling time of the grinding machine.

- Brief change-over and retooling times (<2 min for centering points, <20 min for grinding wheels)
- Easiest assembly
- Optimal centering
- Permits a change in direction of rotation by axial attachment with bolted grinding wheel flange
- Concentric accuracy ≤2/1000 mm

Decisive: the Dressing System

Precise and quick dressing determines the economy of a CBN or diamond grinding machine. As a pioneer of CBN and diamond grinding technology JUNKER has a perfect system for every application. For JUNKER has acquired and developed the necessary know-how over decades.

- Periphery, side faces, radii, profile dressing

Rigid and Precise: the Grinding Spindle

- Up to three high-speed grinding spindles
- High cutting speeds of up to 140 m/sec.
- Automatic dynamic balancing system
- 3-point mounting system

Accurate and Dynamic: the Wheelhead

- Hydrostatic guideways with 5-year warranty
- Stick-slip-free, micron-accurate infeed

The Workhead

- No special driver required: hydraulic clamping between the centers of the driven workpiece spindle and the follow-on tailstock spindle is sufficient
- Roller bearings, directly driven workhead spindle

JUNKER's Central CNC Control Design

Open Architecture

The idea: central control technology for all components of the grinding machine.
All entries and information are processed through the Erwin Junker Operator Panel EJ-OP.

Installation: Safe and Easy

JUNKER's hard and software design significantly reduces the effort to install QUICKPOINT cylindrical grinders. Special software tools are used for a safe and quick installation.

Teleservice: Fast and Effective

The central contact point for all questions and problems is the Junker Service Center JSC with its hotline. If necessary, all available data concerning the machine status can be analysed online. This service by JUNKER increases the system's availability and keeps service costs down.

The Benefits of the Hard and Software Design:

- Free selection of the CNC control: Sinumerik or Fanuc
- All components accessible via Teleservice
- Identical operation of different machines regardless of the control used
- Unified user interface for all components
- Automatic data backup, even for the specification values of all parts purchased from sub-suppliers

Operator Panel EJ-OP : Uniform for All Machines

- Graphic interface and interactive processes for programming and operation
- Simplified training for operator and maintenance personnel
- Minimizes the risk of operator errors
- Quick change-over and set-up
- Storage of all process parameters
- Machine programming can also be done centrally, e.g. in the planning department

Erwin Junker Operator Panel EJ-OP

Setting up the measuring systems

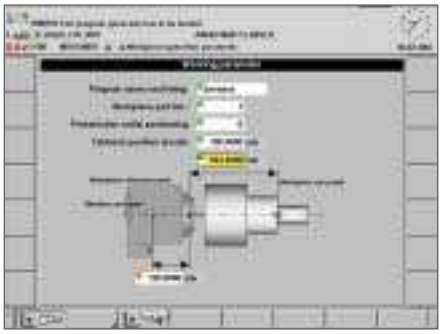

Entering operation parameters

Loading new workpiece programs

Overview of the QUICKPOINT Machines

QUICKPOINT 1000

QUICKPOINT 1000 versions

QUICKPOINT 1000/10
QUICKPOINT 1000/20
QUICKPOINT 1000/50

Compact Precision

Combines low investment costs with reduced operation and maintenance costs for one-off or mass production.

- OD grinding of diameters, shoulders, tapers, undercuts, grooves, radii, faces
- Operating panel can be swivelled up to 90°
- Compactly integrated switchboard cabinet and supply units
- Dimensions without accessories (WxDxH): about 1,400 x 2,850 x 2,000 mm

QUICKPOINT 3000

QUICKPOINT 3000 versions

QUICKPOINT 3000/10
QUICKPOINT 3000/20
QUICKPOINT 3000/40
QUICKPOINT 3000/50
QUICKPOINT 3000/60

Versatile yet Cost Reducing

The grinding center that is suitable for mass production as well as for small productions batches.

- OD, contour, and form grinding
- 5 wheelhead configurations
- Operating panel can be swivelled up to 90°
- Dimensions without accessories (WxDxH): about 3,550 x 2,850 x 2,100 mm

QUICKPOINT 5000

QUICKPOINT 5000 versions

QUICKPOINT 5000/10
QUICKPOINT 5000/20
QUICKPOINT 5000/40
QUICKPOINT 5000/50
QUICKPOINT 5000/60

Efficiency at High Speeds

High flexibility for complete grinding in one clamping. A performance advantage of up to 600% compared to conventional cylindrical grinding when manufacturing tungsten carbide parts at an industrial-scale.

- Shoulders, tapers, chamfers, grooves, undercuts clamping threads, and polygonal surfaces
- Operating panel can be swivelled up to 90°
- Dimensions without accessories (WxDxH): about 4.870 x 3.850 x 2.350 mm

Basic technical data for QUICKPOINT 1000

Center height	100 mm
Distance between centers	max. 150 mm
Grinding length	max. 150 mm
Workpiece weight	max. 5 kg
Grinding wheel diameter	350 mm

Basic technical data for QUICKPOINT 3000

Center height	max. 150 mm
Distance between centers	max. 500 mm
Grinding length	max. 500 mm
Workpiece weight	max. 10 kg
Grinding wheel diameter	350 mm

Basic technical data for QUICKPOINT 5000

Center height	max. 170 mm
Distance between centers	max. 1200 mm
Grinding length	max. 1000 mm
Workpiece weight	max. 70 kg
Grinding wheel diameter	400 mm

Technical Data

Series	1000			3000					5000				
Grinding length	150 mm			500 mm					1000 mm				
Version	/10	/20	/50	/10	/20	/40	/50	/60	/10	/20	/40	/50	/60
Cylindrical grinding QUICKPOINT	■	■	■	■	■	■	■	■	■	■	■	■	■
Shoulder right/left	■ or ■ ☐ and ☐	■ or ■ ☐ and ☐	■ and ■	■ or ■ ☐ and ☐	■ or ■ ☐ and ☐	■ and ■	■ and ■	■ and ■	■ or ■ ☐ and ☐	■ or ■ ☐ and ☐	■ and ■	■ and ■	■ and ■
Taper grinding	–	■	■	–	■	■	■	■	–	■	■	■	■

Possible combinations with													
Plunge feed (no lead)	–	☐	■	–	☐	■	■	■	–	☐	■	■	■
Groove grinding	☐	☐	■	☐	☐	☐	■	■	☐	☐	☐	■	■
Undercuts	–	☐	■	–	☐	☐	■	■	–	☐	☐	■	■
Radial face grinding	–	☐	■	–	☐	☐	■	■	–	☐	☐	■	■
Polygon grinding	–	☐	■	–	☐	☐	■	■	–	☐	☐	■	■
Thread grinding	–	☐	■	–	☐	☐	■	■	–	☐	☐	■	■

■ possible

☐ conditionally possible

Features and Options

Standard Features

- Fully automatic dressing cycle
- 3-point mounting system for the abrasive wheel
- Hydrostatic cylindrical guideways (X-axis)
- Flat prism guideways (Z-axis)
- Tailstock axially adjustable
- Clamping pressure hydraulically adjustable
- EJ-OP user interface
- Sinumerik or Fanuc control*

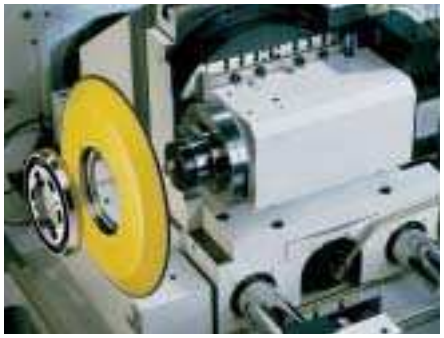

Quick exchange of the feeder and carrier by 3-point mounting system

Options

JUNKER automated loading systems:

- Internal gantry loader (JUNKER) for secure productivity
- External gantry loader can be attached modularly; semi- or fully automatic depending on customer requirements
- Axial positioning device, diameter measuring device
- C-axis on workhead
- Plane dressing unit
- Steady rests

QUICKPOINT 5000 with swivelling flap on the front hood for manual loading and unloading

Internal gantry loader with workpiece conveyor belt

Reliable Fire Protection: the JUNKER Safety System

Because QUICKPOINT technology uses oil as a cooling lubricant there is a potential danger of fire and explosion. The JUNKER safety system, which is standard in all QUICKPOINT series, prevents damages to machines and facilities. In the unlikely event of an explosion the pressure relief flap closes immediately thereafter so the interior is hermetically sealed, and due to the lack of oxygen which was used up during the deflagration fires cannot start (system certified by the Institut für Sicherheitstechnik IBExU). Upon request additional extinguishers (CO2 or fogging systems) can be installed.

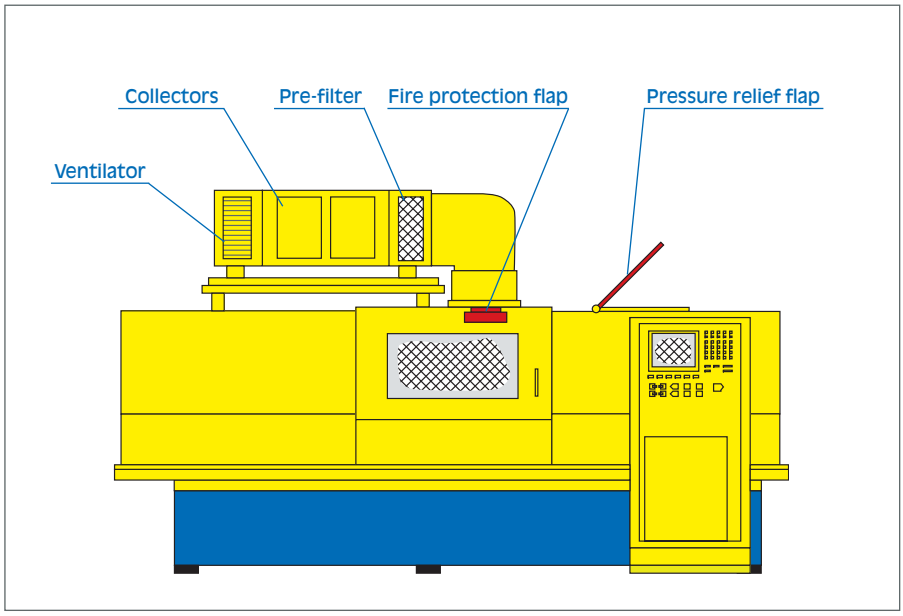

JUNKER safety system: reliable fire protection by cutting off the air supply

*Status October 2004

JUNKER
Maschinen

Erwin Junker
Maschinenfabrik GmbH
Junkerstraße 2
77787 Nordrach
Germany

Phone: +49 (0)7838 84-0
Fax: +49 (0)7838 84-302
E-Mail: info@junker.de
www.junker-group.com

JUNKER
Grinding Technology

Erwin Junker
Grinding Technology Mělník Ltd.
Sokolovská 68/105
18600 Praha 8-Karlín
Czech Republic

Phone: +420 2 24 89 06 10
Fax: +420 2 24 81 82 44
E-Mail: info@junker.cz
www.junker-group.com

JUNKER
BSH Machines

BSH Holice Ltd.
Pardubická 332
53413 Holice
Czech Republic

Phone: +420 466 00 31 11
Fax: +420 466 68 21 49
E-Mail: info@junker.cz
www.junker-group.com

JUNKER
Machine Tools

Junker Machine Tools &
Technology (UK) Ltd.
Hadleigh House
32 Sefton Road
Fulwood Park
Sheffield S10 3TP · U.K.

Phone: +44 (0)114 230 34 53
Fax: +44 (0)114 230 93 82
E-Mail: info@junker-group.co.uk
www.junker-group.com

JUNKER
Machinery

Erwin Junker
Machinery Inc.
2029 Lyons Road
Dayton, OH 45342
USA

Phone: +1 937 433 07 74
Fax: +1 937 433 07 75
E-Mail: info@junker-usa.com
www.junker-usa.com

JUNKER
Maschinen

Erwin Junker
Maschinenfabrik GmbH
Shanghai Representative Office
Rm. G. H, 11 Floor, North Gate Plaza
No.99 Tianmu Road West
Shanghai 200070 · P.R. China

Phone: +86 (0)21 63 80 69 11
Fax: +86 (0)21 63 80 69 55
E-Mail: info@junker.com.cn
www.junker.com.cn

JUNKER
Maschinen

Erwin Junker
Maschinenfabrik GmbH
Beijing Representative Office
Rm. 1606 Liye Building
No.71 Majiapu Road East, Fengtai Dist.
Beijing 100068 · P.R. China

Phone: +86 (0)10 51 16 50 66
Fax: +86 (0)10 51 16 50 22
E-Mail: info@junker.com.cn
www.junker.com.cn

Modifications for the sake of technical improvement reserved.

8.28965 E 1004

JUNKER
partner for precision

QUICKPOINT Blank

Blank production from bar stock

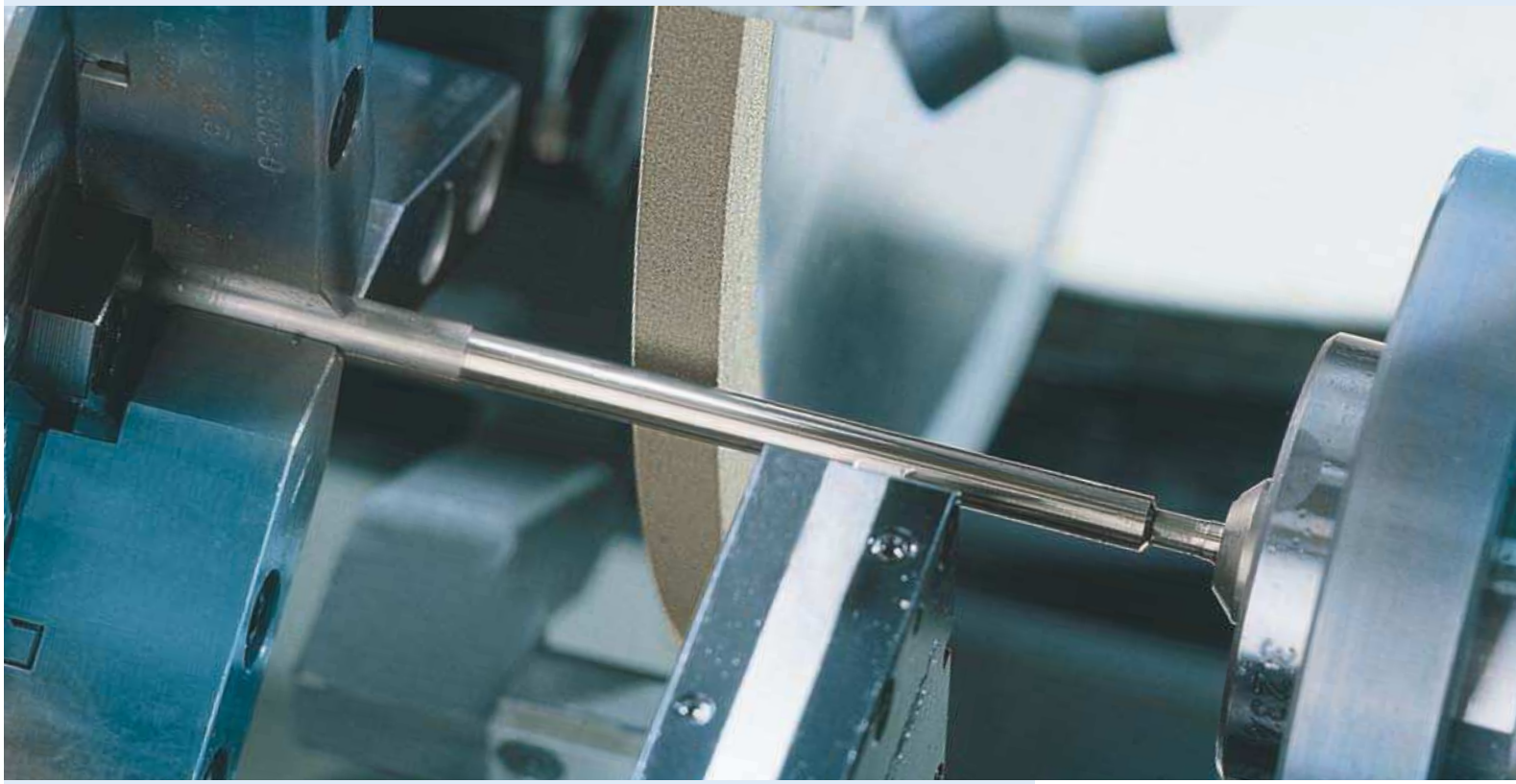

QUICKPOINT 3000 Blank

Highly flexible blank production for cutting tools

Productivity in a new dimension

With QUICKPOINT 3000 Blank, JUNKER is revolutionising the manufacture of blanks for the production of symmetrically rotating cutting tools. All steps from feeding the raw material rod via beveling, supporting the workpiece, contour grinding, cutting and proper depositing are made completely automatically. Maximum productivity is ensured by the QUICKPOINT High Speed Grinding (HSG) process.

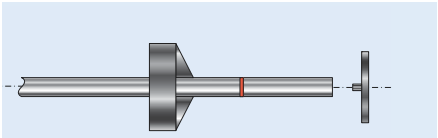

Grinding back rest seat

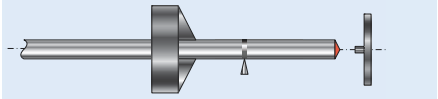

Grinding centre or chamfer

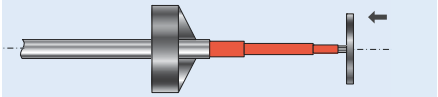

Pre/finish grinding profile

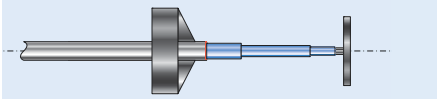

Cutting

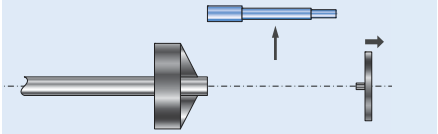

Removing tool blank

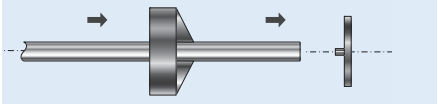

Retightening blank rod

No semi-finished products stock – short cycle time

The new JUNKER QUICKPOINT 3000 Blank machine concept satisfies the market requirement for the shortest cycle times and the abolition of the semi-finished stock in every regard. Just-in-time production is thus reality.

QUICKPOINT 3000 Blank for HM blank rods

- Max. rod length: 400 mm
- Rod diameter: 3 - 25.4 mm
- No special requirements for the shape and allowance of the HM blank rods
- Extreme increase in quality
- All in one clamping
- Completely automated loading and unloading system (JUNKER handling cell with internal portal loading system)

QUICKPOINT 3000 Blank for hardened HSS blank rods

- Max. rod length: 1200 mm
- Rod diameter: 3 - 16 mm
- Simple, fast retooling
- All in one clamping
- Completely automated loading and unloading system (JUNKER rod loader combined with internal unloading conveyor)

QUICKPOINT Blank: Advantages

- Minimum cycle time due to combination of all production steps
- Increase in quality due to machining all in one clamping
- Maximum productivity using the QUICKPOINT HSG process
- High level of autonomy due to complete automation
- Maximum flexibility due to maximum retooling convenience

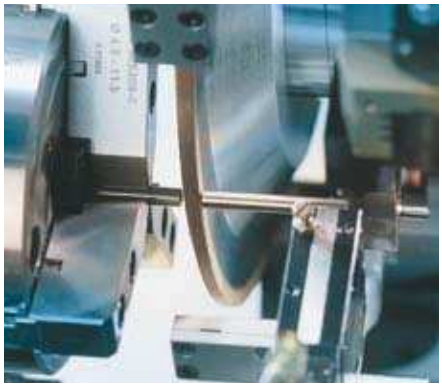

Cutting the finished blank

Possible additional operations

- Drill tip up to 120°
- Chamfer at end of shaft
- Weldon slot or whistle notch on the shaft
- Square bar at end of shaft

The central JUNKER CNC control concept

All inputs and data run via the Erwin Junker "EJ-OP Operator Panel" control platform developed by JUNKER. A modern and high-performance controller with colour monitor and integrated PC.

JUWOP/RP software

The interaction of the machine axes and the controller in combination with the JUWOP/RP software package provides the best prerequisites for maximum precision machining of tool blanks.

- Programming dimensions and profiles
- Definition of the grinding operations
- Calculation of the CNC grinding program

Technical data

	QUICKPOINT 3000 Blank for HM blank rods	QUICKPOINT 3000 Blank for hardened HSS blank rods
Blank rod length	max. 400 mm	max. 1,200 mm
Blank rod diameter	3 - 25.4 mm	3 - 16 mm
Blank rod weight	max. 3.0 kg	max. 3.0 kg
Abrasive	Diamond	CBN
Grinding wheel diameter	350 mm	350 mm
Number of grinding spindles	2 or 3	2 or 3
Grinding spindle power	24 kW	24 kW
X-axis	Horizontal infeed	Horizontal infeed
Z-axis	Axial feed	Axial feed
B-axis	Swivel movement Wheelhead	Swivel movement Wheelhead

Dimensions (without accessories)
Width x depth x height: 4,700 x 3,400 x 2,200 mm
Machine weight: approx. 8,000 kg

QUICKPOINT 3000 Blank for HM blank rods with JUNKER handling cell

QUICKPOINT 3000 Blank for hardened HSS blank rods with JUNKER rod loader

JUNKER
partner for precision

EUROPE

JUNKER Maschinen

Erwin Junker
Maschinenfabrik GmbH
Junkerstraße 2
77787 Nordrach
Germany

Phone: +49 (0)7838 84-0
Fax: +49 (0)7838 84-302
E-Mail: info@junker.de
www.junker-group.com

JUNKER Grinding Technology

Erwin Junker
Grinding Technology Mělník Ltd.
Sokolovská 68/105
18600 Praha 8-Karlín
Czech Republic

Phone: +420 2 24 89 06 10
Fax: +420 2 24 81 82 44
E-Mail: info@junker.cz
www.junker-group.com

JUNKER BSH Machines

BSH Holice Ltd.
Pardubická 332
53413 Holice
Czech Republic

Phone: +420 466 00 31 11
Fax: +420 466 68 21 49
E-Mail: info@junker.cz
www.junker-group.com

EUROPE

JUNKER Machines Outils

JUNKER France
13 rue Camille-Desmoulins
92441 Issy Les Moulineaux Cedex
France

Phone: +33 (0)1 58042781
Fax: +33 (0)1 58042300
E-Mail: info@junker-france.com
www.junker-group.com

JUNKER Machine Tools

Junker Machine Tools &
Technology (UK) Ltd.
Hadleigh House
32 Sefton Road, Fulwood Park
Sheffield S10 3TP
U.K.

Phone: +44 (0)114 230 34 53
Fax: +44 (0)114 230 93 82
E-Mail: info@junker-group.co.uk
www.junker-group.com

NORTH AMERICA

ERWIN JUNKER
High Performance Grinding Systems

Erwin Junker
Machinery Inc.
1524 Davis Road
Elgin, IL 60123
USA

Phone: +1 847 488 0406
Fax: +1 847 488 0436
E-Mail: info@junker-usa.com
www.junker-usa.com

ASIA

JUNKER Maschinen

Erwin Junker Maschinenfabrik GmbH
Shanghai Representative Office
Rm. G. H, 11 Floor, North Gate Plaza
No.99 Tianmu Road West
Shanghai 200070
P.R. China

Phone: +86 (0)21 63 80 69 11
Fax: +86 (0)21 63 80 69 55
E-Mail: info@junker.com.cn
www.junker.com.cn

JUNKER Maschinen

Erwin Junker Maschinenfabrik GmbH
Beijing Representative Office
Rm. 1606 Liye Building
No.71 Majiapu Road East, Fengtai Dist.
Beijing 100068
P.R. China

Phone: +86 (0)10 51 16 50 66
Fax: +86 (0)10 51 16 50 22
E-Mail: info@junker.com.cn
www.junker.com.cn

8.31627 E 0906 We reserve the right to make changes that serve technical progress. Marschner+Kühn

JUNKER
partner for precision

EUROPE

JUNKER Maschinen

Erwin Junker
Maschinenfabrik GmbH
Junkerstraße 2
77787 Nordrach
Germany

Phone: +49 (0)7838 84-0
Fax: +49 (0)7838 84-302
E-Mail: info@junker.de
www.junker-group.com

JUNKER Grinding Technology

Erwin Junker
Grinding Technology Mělník Ltd.
Sokolovská 68/105
18600 Praha 8-Karlín
Czech Republic

Phone: +420 2 24890610
Fax: +420 2 24818244
E-Mail: info@junker.cz
www.junker-group.com

JUNKER BSH Machines

BSH Holice Ltd.
Pardubická 332
53413 Holice
Czech Republic

Phone: +420 466 003111
Fax: +420 466 682149
E-Mail: info@junker.cz
www.junker-group.com

EUROPE

JUNKER Machines Outils

JUNKER France
13 rue Camille-Desmoulins
92441 Issy Les Moulineaux Cedex
France

Phone: +33 (0)1 58042781
Fax: +33 (0)1 58042300
E-Mail: info@junker-france.com
www.junker-group.com

JUNKER Machine Tools

Junker Machine Tools &
Technology (UK) Ltd.
Hadleigh House
32 Sefton Road, Fulwood Park
Sheffield S10 3TP
U.K.

Phone: +44 (0)114 2303453
Fax: +44 (0)114 2309382
E-Mail: info@junker-group.co.uk
www.junker-group.com

NORTH AMERICA

ERWIN JUNKER

High Performance Grinding Systems

Erwin Junker
Machinery Inc.
1524 Davis Road
Elgin, IL 60123
USA

Phone: +1 847 488 0406
Fax: +1 847 488 0436
E-Mail: info@junker-usa.com
www.junker-usa.com

ASIA

JUNKER Maschinen

Erwin Junker Maschinenfabrik GmbH
Shanghai Representative Office
Rm. G. H, 11 Floor, North Gate Plaza
No.99 Tianmu Road West
Shanghai 200070
P.R. China

Phone: +86 (0)21 63806911
Fax: +86 (0)21 63806955
E-Mail: info@junker.com.cn
www.junker.com.cn

JUNKER Maschinen

Erwin Junker Maschinenfabrik GmbH
Beijing Representative Office
Rm. 1606 Liye Building
No.71 Majiapu Road East, Fengtai Dist.
Beijing 100068
P.R. China

Phone: +86 (0)10 51165066
Fax: +86 (0)10 51165022
E-Mail: info@junker.com.cn
www.junker.com.cn

Änderungen, die dem technischen Fortschritt dienen, behalten wir uns vor.

8.31631 E 0906

Flexible and precise

High performance in all applications

RELIEF EXPERT – The measuring device for precise relief measurement of the thread and first cut on practically every type of straight or spiral-fluted or conical workpieces.

The following cutting tools (Ø 1-80 mm) can be measured using RELIEF EXPERT:

- Tap drills
- Thread molders
- Thread milling cutters

The measurement options in detail

- Relief measurement on the thread flanks, one or both sides
- Relief measurement on the outer thread diameter
- Relief measurement on the first cut

Technology to rely on

The workpiece is driven on the C axis (workpiece rotary motion) by a servo motor and a flat belt drive. The measuring sensor is advanced on the Y axis (vertical axis) by a servo motor and precision guides.
The highest measurement precision for both axes is guaranteed by the direct, high resolution distance measuring system with the incremental shaft encoder.

Benefits of CNC control

- No chasing leaders required
- Fully-automatic measurement process

Software features

- Numeric and graphic measured value view
- Statistics
- Software: Windows XP

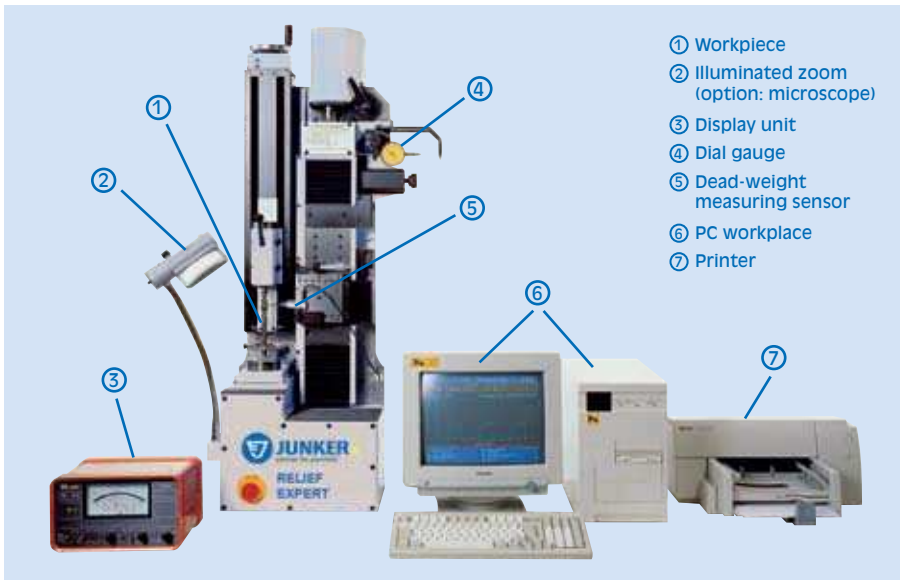

Menu page, Workpiece data

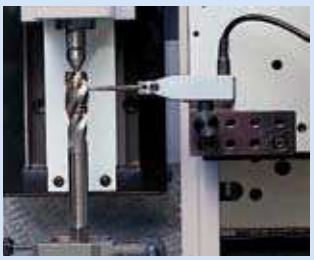

Tap drill in measurement position

Optical accessories for setting the measuring sensor position

- Illuminated zoom (standard)
- Microscope (optional)

Standard „Zoom" equipment

„Microscope" option

JUNKER
partner for precision

EUROPE

JUNKER Maschinen

Erwin Junker
Maschinenfabrik GmbH
Junkerstraße 2
77787 Nordrach
Germany

Phone: +49 (0)7838 84-0
Fax: +49 (0)7838 84-302
E-Mail: info@junker.de
www.junker-group.com

JUNKER Grinding Technology

Erwin Junker
Grinding Technology Mělník Ltd.
Sokolovská 68/105
18600 Praha 8-Karlín
Czech Republic

Phone: +420 2 24890610
Fax: +420 2 24818244
E-Mail: info@junker.cz
www.junker-group.com

JUNKER BSH Machines

BSH Holice Ltd.
Pardubická 332
53413 Holice
Czech Republic

Phone: +420 466 003111
Fax: +420 466 682149
E-Mail: info@junker.cz
www.junker-group.com

EUROPE

JUNKER Machines Outils

JUNKER France
13 rue Camille-Desmoulins
92441 Issy Les Moulineaux Cedex
France

Phone: +33 (0)1 58042781
Fax: +33 (0)1 58042300
E-Mail: info@junker-france.com
www.junker-group.com

JUNKER Machine Tools

Junker Machine Tools &
Technology (UK) Ltd.
Hadleigh House
32 Sefton Road, Fulwood Park
Sheffield S10 3TP
U.K.

Phone: +44 (0)114 2303453
Fax: +44 (0)114 2309382
E-Mail: info@junker-group.co.uk
www.junker-group.com

NORTH AMERICA

ERWIN JUNKER

High Performance Grinding Systems

Erwin Junker
Machinery Inc.
1524 Davis Road
Elgin, IL 60123
USA

Phone: +1 847 488 0406
Fax: +1 847 488 0436
E-Mail: info@junker-usa.com
www.junker-usa.com

ASIA

JUNKER Maschinen

Erwin Junker Maschinenfabrik GmbH
Shanghai Representative Office
Rm. G. H, 11 Floor, North Gate Plaza
No.99 Tianmu Road West
Shanghai 200070
P.R. China

Phone: +86 (0)21 63806911
Fax: +86 (0)21 63806955
E-Mail: info@junker.com.cn
www.junker.com.cn

JUNKER Maschinen

Erwin Junker Maschinenfabrik GmbH
Beijing Representative Office
Rm. 1606 Liye Building
No.71 Majiapu Road East, Fengtai Dist.
Beijing 100068
P.R. China

Phone: +86 (0)10 51165066
Fax: +86 (0)10 51165022
E-Mail: info@junker.com.cn
www.junker.com.cn

We reserve the right to make changes that serve technical progress.

8.30781 E 0406

Two grind quicker than one!

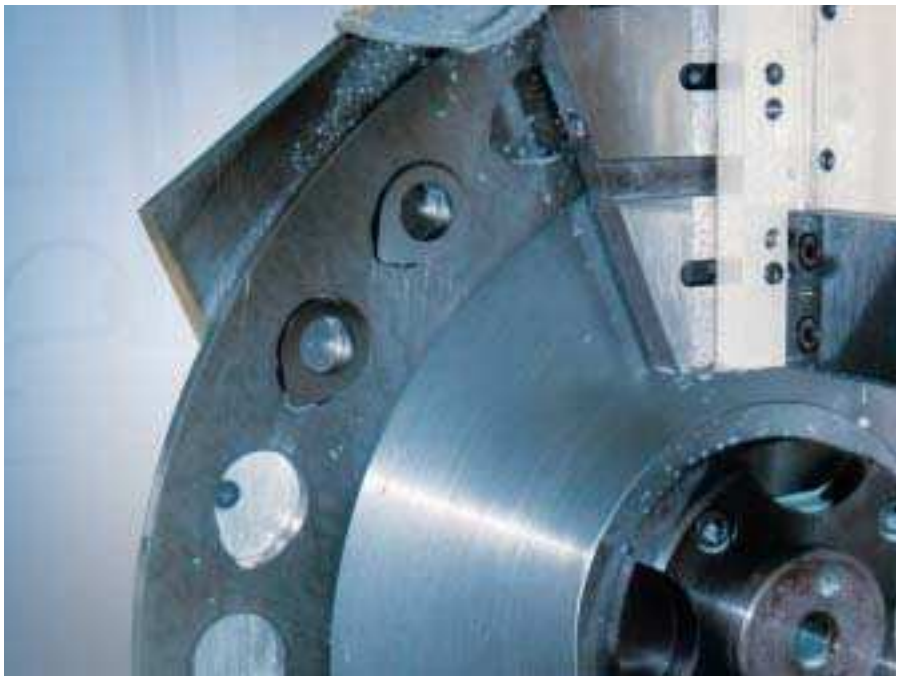

Grinding with vertical wheels

With SATURN double-disc surface grinding, two vertical grinding wheels simultaneously grind the workpiece on its parallel outer surfaces. The grinding wheels are set against each other at a slightly conical angle, so that as it passes from top to bottom, the workpiece retains its final dimension only in the bottom section of the grinding path. Because the workpieces are fed vertically between the grinding wheels, the bearing weight of the workpiece does not affect the grinding result. What's more, the coolant can simply drain downwards together with the removed material. The SATURN range comprises three different machining processes:

1. Rotation process

With SATURN double-disc surface grinding using the rotation process, a closed or an open breaker plate (star plate) feeds the workpieces between the grinding wheels and the guide plates, which are automatically adjusted by the control. This through-feed grinding process, which employs a rotating workpiece carrier, is suitable for a number of workpiece shapes, as well as for cylindrical or square elements. In the case of small parts such as piston components, needles, bushings etc. with diameters of approx. 8 mm, cycle times of as high as 450 parts per minute are achievable. Characteristic of this rotation process, which is used in approx. 90 % of all applications, is the combination of high accuracy and high output.

Rotation process applications

- Con rods
- Engine valves
- Compressor valve plates
- Anchor plates
- Brake discs
- Piston components
- Cams
- Bearing supports
- Gearwheels

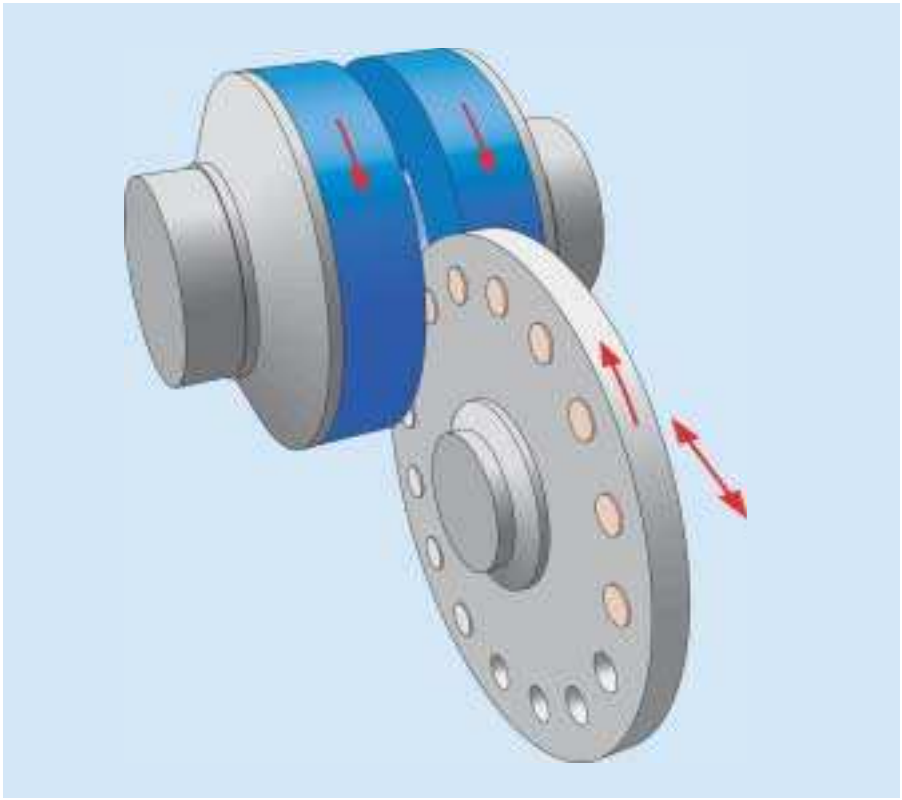

JUNKER
partner for precision

SATURN

Double-disc surface grinding

2. Parallel grinding with linear through-feed

Double-disc surface grinding with linear through-feed is a high performance grinding process for symmetrically rotating parts such as roller bearing rings, valve seat rings etc. The workpieces run between the grinding wheels located between two guide rails set at slight angles to each other. A rolling or flat guide feeds the workpieces.

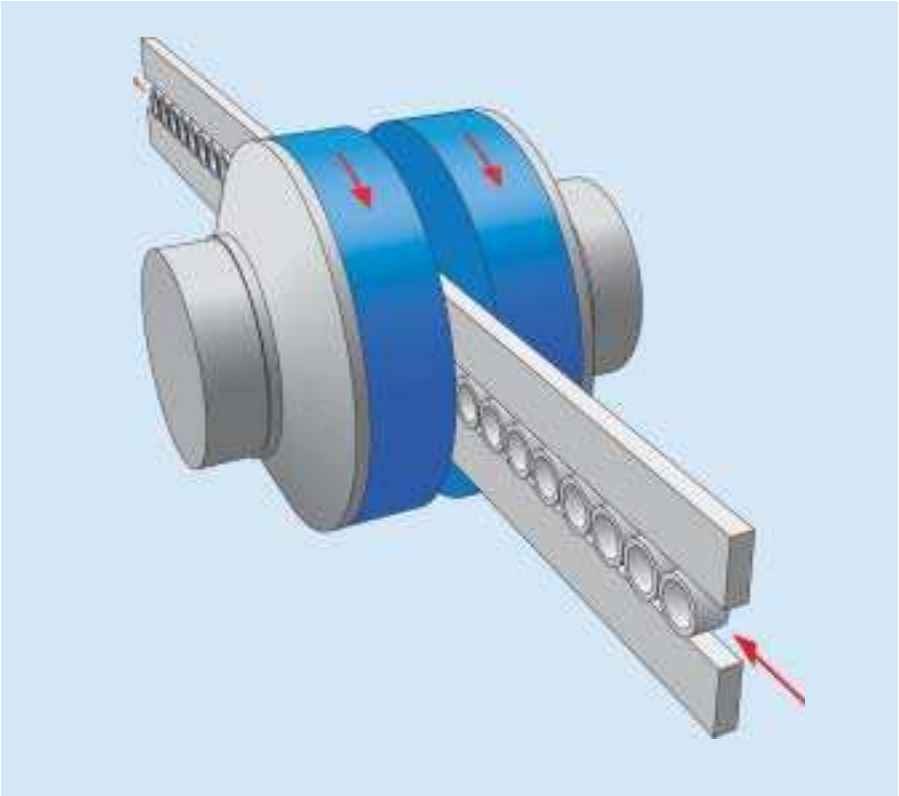

Linear through-feed applications

- Roller bearing rings
- Valve seat rings
- Clutch plates

3. Pendulum grinding

The principle of multi-stage plunge-cut grinding based on the pendulum process provides a solution for free workpiece contours. A pendulum tool carrier swings up and down between the grinding wheels. The machine is stopped to load the carrier with workpieces. This technology is used mainly for workpieces with relatively large stock amounts (up to 5 mm).

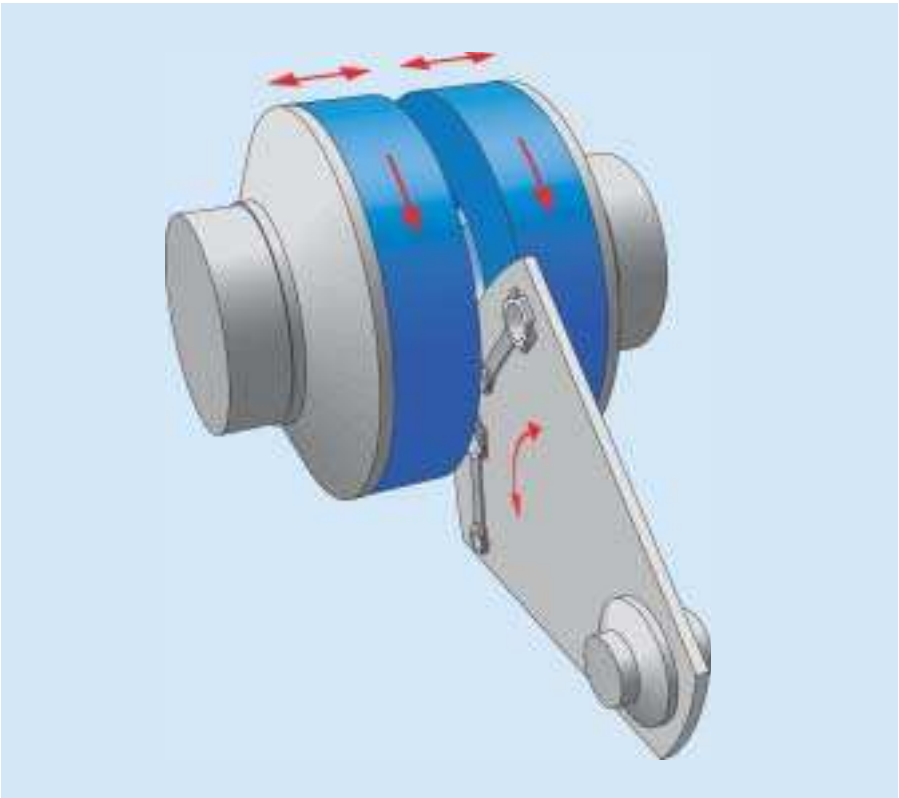

Pendulum grinding applications

- Con rods
- Various forged or cast parts
- Solid sintered parts

SATURN improves cost-efficiency

Expertise for grinding large-scale standard parts

The SATURN double-disc surface grinding machine is suitable for workpiece diameters from 5 to 200 mm. Its design combines the latest technical insights into grinding and JUNKER's long-standing experience, offering ideal solutions for meeting all requirements relating to output and ease of operation. Swift process flows achieve high efficiency for large-scale standard production. The ease of retooling enabled by the simple procedure to change the transport wheel is valued especially for small batch sizes. Alternatively, conventional grinding wheels or CBN technology can be used. This permits the grinding of softer steels, such as high-speed or stainless steel, as well as carbide, ceramics, ferrite and other sintered materials.

Cost benefit:

- Very high throughput
- Efficient solution for small workpieces that would otherwise be difficult to clamp
- Automatic loading and unloading
- Automatic workpiece feed
- High utilization ratio with CBN abrasive and emulsion or oil as coolant
- Extensive after sales service

Technical benefits

- Simple grinding wheel change when using the rotation process thanks to ease of access: Carrier wheel console on portable carriage enables grinding cell to be quickly freed
- Multi-circuit lubrication unit with progressive distributor system
- Machine's full protection cover, prefitted for connection to a grinding mist extractor

Stable grinding process with automatic centre positioning

The actual position of the left grinding wheel is a reference level for the basic position of the grinding gap. A scanning unit, comprising probe, carbide monitoring plate and housing, records the position of the reference wheel. This position is displayed on the machine control monitor. If CBN grinding media are used, centre positioning becomes unnecessary because practically no grinding wheel wear occurs.

Safety through experience

JUNKER is a pioneer when it comes to using CBN grinding wheels for high-speed machining. Thanks to this lead in experience and knowledge, the company is the market leader in this sector. What better testimony than its long list of renowned customers, some of whom have been convinced by JUNKER technology for years. They understand the value of the extensive test facilities in the JUNKER Test Centre, as well as the expertise for integrating grinding machines into production line chains and implementing turnkey solutions. Every customer receives its individually equipped SATURN system with loading facilities, from mainly manual to fully-automatic, including sorting station and buffer unloading.

The central JUNKER CNC control concept

An open overall system

The concept: central control technology for all grinding machine components. All inputs and data run via the EJ-OP Erwin Junker operator panel. On SATURN machines, this panel is the user interface for a Siemens Sinumerik 840D CNC control.

Start-up: simple and safe

The JUNKER hardware and software concept significantly reduces installation input for the SATURN double-disc surface grinding machines. Special software tools are used to ensure safe and gradual start-up.

Teleservice: swift and efficient

The first port of call for all questions and problems are the staff at JUNKER Service. All data available on the machine's status can be analysed online as required. This JUNKER service increases system availability, thus keeping service costs low.

The benefits of the hardware and software concept

- All components accessible via Teleservice
- Identical operation of different machines, irrespective of the control used
- Standardised operator interface for all components
- Automatic data backup, including the settings for all auxiliary assemblies

EJ-OP operator panel: standard for all machines

- Graphic display of interactive processes during programming and operation
- Reduced training requirement
- Minimised risk of maloperation
- Swift retooling and set-up
- All machining parameters stored
- Central machine programming (optional) possible, i.e. in the engineering department
- Online language selection for several languages
- Online help

Erwin Junker Operator Panel EJ-OP

Standard control functions

- Grinding wheel feed
- Dressing cycle
- Feed plates feed
- Delivery plates feed

Control options

- Swivelling spindle headstocks
- Tilting spindle headstocks

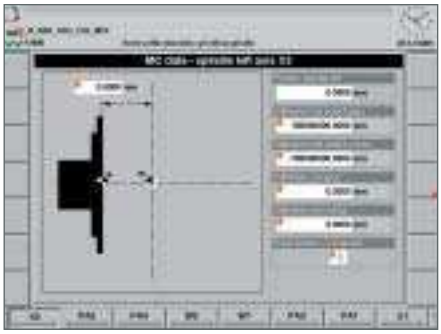

Axis adjustment

Grinding wheel data

Dimensional adjustment

Technology for daily productivity

Designed for precision

A compact grey cast iron bed with stabilising ribbing carries the two spindle headstocks and rotation tool carriage. To change the workpiece guide tool or any other component, this is simply moved outwards. Both its front section and the transition of the spindle headstocks to the grinding spindle sleeves are protected by belows cover and telescopic metal covers. The grinding wheel is changed from the top through a manually opening door.

Grinding spindle

- Two integrated 30 kW spindle drives, with rotational direction changeover
- Continuous regulation of circumferential speed from 15 m/sec to 80 m/sec
- Precise mounting on roller bearings
- Coolant feed through hollow spindle
- Feed-in via ball spindle bearing, servo drive including brake and temperature sensor
- Complete distance measuring system (glass scale)

Grinding spindle head

The two SATURN spindle headstocks of the grinding wheels are mounted on three rigid locating elements and can be manually adjusted in two vertical planes. A CNC control is available as optional equipment. The actual position is displayed on the screen of the machine control.

Four workpiece guide plates

The machine is fitted with two upper guide plates on the protective hood and two lower guide plates on the workpiece carrier console. The plate feed-in units consist of servo drive and housing with integrated feed-in spindle. A distance measuring system (Econder) delivers information on continuous adjustment, which is accurate to 0.005 mm. During retooling, the guide plates are automatically adjusted to the newly defined workpiece width.

Double-wheel surface grinding of con-rods using rotation technology

Automation options

The SATURN double-disc surface grinding machine can be equipped with an automatic feed for practically every work piece type.

Fully automatic dressing

Dressing unit

Alternatively, the SATURN can be equipped with a stationary dressing tool (needle plate or single tip diamond) or a dressing wheel. The adjustment made by the dressing unit to the swivel and tilt of the grinding wheels is fully and automatically adjusted by the electronic control. The swivel movement of the dressing arm is controlled by a servo drive with distance measuring system and continuously adjustable traversing speed.

Optional post-process measuring unit

To improve production reliability, a post process measuring unit for a test quota of 100 % is available. Its two dampened measuring fingers are located on the SATURN unloading plates, the electronic control with display is integrated into the machine's operator panel.

Technical data

Options

- Workpiece-specific:
  All types of automation systems
- Post-process measurement control:
  Hundred percent contact measurement directly behind the exit of the grinding zone
- CNC grinding gap adjustment:
  Two servo drives for each spindle head-stock with direct distance measuring system via glass scale
- Structure-borne noise sensors:
  For optimum monitoring of the grinding and dressing processes
- Dressing system for use of a rotating dressing tool with spindle drive
- Machine equipment for use of CBN grinding media
- Mist extraction systems

Machine type	**SATURN**
Grinding process	Rotation process Parallel grinding with linear through-feed Pendulum grinding
Maximum workpiece width	180 mm with a grinding wheel height of 75 mm
Minimum workpiece width	5 mm (thinner upon request and clarification)
Maximum workpiece diameter: Rotation grinding	200 mm
Maximum workpiece diameter: Linear through-feed	320 mm
Max. outside diameter of carrier wheel	900 mm
Grinding wheel diameter	660 mm (optional 762 mm)
Height (including cable connection of machine to electrical cabinet)	2700 mm
Height (excluding cable connection of machine to electrical cabinet)	1650 mm
Width over spindle drives	4000 mm
Length	3100 mm
Weight	15000 kg

JUNKER
partner for precision

EUROPE

JUNKER Maschinen

Erwin Junker
Maschinenfabrik GmbH
Junkerstraße 2
77787 Nordrach
Germany

Phone: +49 (0)7838 84-0
Fax: +49 (0)7838 84-302
E-Mail: info@junker.de
www.junker-group.com

JUNKER Grinding Technology

Erwin Junker
Grinding Technology Mělník Ltd.
Sokolovská 68/105
18600 Praha 8-Karlín
Czech Republic

Phone: +420 2 24 89 06 10
Fax: +420 2 24 81 82 44
E-Mail: info@junker.cz
www.junker-group.com

JUNKER BSH Machines

BSH Holice Ltd.
Pardubická 332
53413 Holice
Czech Republic

Phone: +420 466 00 31 11
Fax: +420 466 68 21 49
E-Mail: info@junker.cz
www.junker-group.com

EUROPE

JUNKER Machines Outils

JUNKER France
13 rue Camille-Desmoulins
92441 Issy Les Moulineaux Cedex
France

Phone: +33 (0)1 58042781
Fax: +33 (0)1 58042300
E-Mail: info@junker-france.com
www.junker-group.com

JUNKER Machine Tools

Junker Machine Tools &
Technology (UK) Ltd.
Hadleigh House
32 Sefton Road, Fulwood Park
Sheffield S10 3TP
U.K.

Phone: +44 (0)114 230 34 53
Fax: +44 (0)114 230 93 82
E-Mail: info@junker-group.co.uk
www.junker-group.com

NORTH AMERICA

ERWIN JUNKER

High Performance Grinding Systems

Erwin Junker
Machinery Inc.
1524 Davis Road
Elgin, IL 60123
USA

Phone: +1 847 488 0406
Fax: +1 847 488 0436
E-Mail: info@junker-usa.com
www.junker-usa.com

ASIA

JUNKER Maschinen

Erwin Junker Maschinenfabrik GmbH
Shanghai Representative Office
Rm. G. H, 11 Floor, North Gate Plaza
No.99 Tianmu Road West
Shanghai 200070
P.R. China

Phone: +86 (0)21 63 80 69 11
Fax: +86 (0)21 63 80 69 55
E-Mail: info@junker.com.cn
www.junker.com.cn

JUNKER Maschinen

Erwin Junker Maschinenfabrik GmbH
Beijing Representative Office
Rm. 1606 Liye Building
No.71 Majiapu Road East, Fengtai Dist.
Beijing 100068
P.R. China

Phone: +86 (0)10 51 16 50 66
Fax: +86 (0)10 51 16 50 22
E-Mail: info@junker.com.cn
www.junker.com.cn

8.31623 E 0906
We reserve the right to make changes that serve technical progress. Marschner+Kühn

Precise – productive – flexible: Tap drill and thread former production with TAPOMAT

Flexible and productive

The perfect solution for efficient thread cutting and first cut in one clamping: TAPOMAT. Due to its high flexibility and extremely short set-up times, it is ideally suited for small batches as well as for mass production. Particular flexibility is provided by the CNC-controlled grinding relief movement. The permanent dimensional stability permits reliable production with low manpower.

Areas of application:

- Standard tap drill
- Conical pipe tap drill
- Nut tap drill
- Thread former
- Special tap drill

- Multi-tooth/single tooth grinding, with or without first cut grinding
- Right-hand or left-hand thread
- Straight or helical grooves
- Nut tap drills with or without pitch offset

Machine concept TAPOMAT 1000

High flexibility, short set-up times, easy to use and a small footprint distinguish the TAPOMAT 1000. It provides the following features in the 0.8 - 4 mm workpiece diameter range:

- CNC thread and/or first cut grinding with two grinding wheels in one clamping
- JUNKER 3-point grinding wheel mounting system
- CNC-controlled relief grinding
- Hydrostatic circular guiding and feed-in spindle
- Semi and/or completely automatic loadingsystem

Machine concept TAPOMAT 3000

This machine also operates with two grinding wheels. Thread and chamfer are ground in one clamping. All first cut forms can be produced with the diamond dressing wheel. It provides the following features in the 3 - 25.4 mm workpiece diameter range:

- CNC thread and/or first cut grinding with two grinding wheels in one clamping
- JUNKER 3-point grinding wheel mounting system
- Hydrodynamic circular guiding and feed-in spindle
- Completely automated loading and unloading system (JUNKER handling cell with internal portal loading system)

Unique: sensational relief grinding technology

With the patented process developed by JUNKER, all known relief grinding shapes and sizes on the thread of tap drills can be realised with a single cam.
The CNC-controlled relief grinding motion provides maximum flexibility for the first cut.

Thread grinding

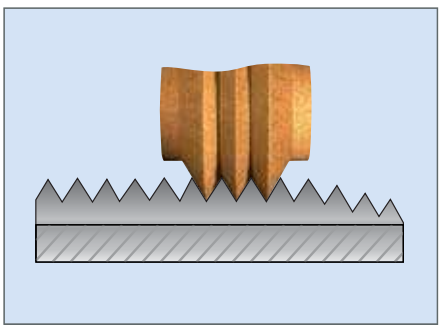

Multi-tooth grinding

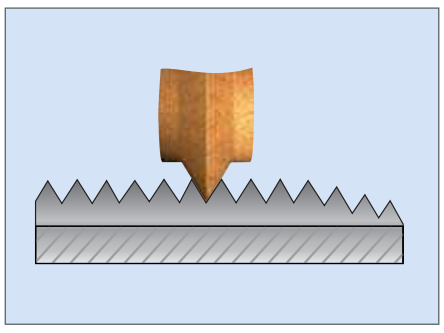

Single-tooth grinding

Single-tooth grinding

Grinding with the single-tooth disc is particularly interesting for small batch sizes as the thread profiles can be dressed individually on the machine.

Precision due to high quality components

Equipment TAPOMAT

- Vibration damping, torsion-resistant machine stand made of cast mineral composite
- Grinding spindle with integrated, completely automatic and dynamic balancing system
- 3-point mounting system on grinding spindle
- Jukomet high performance spindle
  TAPOMAT 1000: Drive power max. 5 kW
  TAPOMAT 3000: Drive power max. 12 kW

Most up to date dressing equipment

The profiling of the thread grinding wheel on the TAPOMAT 1000 is performed with a diamond roller (optionally single or multi-tooth disc). Diamond dressing plates are used for the profiling of the first cut grinding wheel.
A rolling-in mechanism for profiling the single or multi-tooth thread grinding wheel and the first cut grinding wheel are available on the TAPOMAT 3000. Alternatively, the grinding wheels for first cut and single-tooth thread can be CNC-dressed on a diamond wheel on the workpiece spindle.

Ready for the future: Machine concept Evolution^2

The JUNKER Evolution^2 concept is a platform concept where the Tooltec machines for cutting tool production are also integrated. Benefits for the machine operators are mainly the synergy effects for operation of several machines, such as more efficient service and reduced spare part inventory and higher availability due to proven components. The consistent operating concept is advantage in daily production as the machine operators can switch between several machines without having to re-accustom themselves to each one.

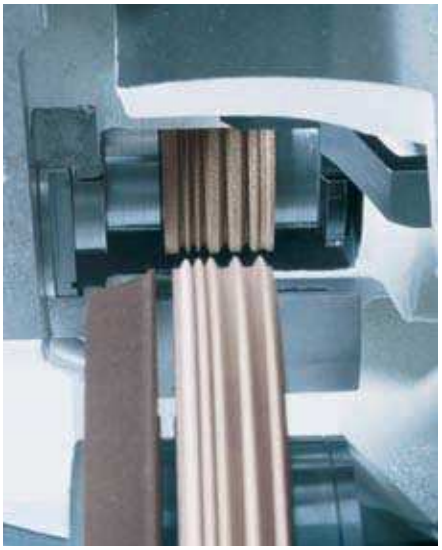

Rolling in the thread grinding wheel

Dressing of the first cut grinding wheel

Cutting tool production with JUNKER grinding lines

For more efficiency using machining steps perfectly matched to each other: Depending on the tool, a JUMINIMAT, a JUMAXIMAT or a FLUTEMAT is integrated in the line for creating the flute geometry.

QUICKPOINT 3000 Blank
The machine concept for manufacturing "off the rack" tool blanks

FLUTEMAT
The machine concept for flute grinding on tap drills, milling cutters and reamers "manufactured from solid metal" Ø 2 - 16 mm

The central JUNKER CNC control concept

An open system

The concept: central control technology for all grinding machine components. All inputs and data run via the EJ-OP Erwin Junker operator panel. On TAPOMAT machines, this panel is the user interface for a Siemens Sinumerik 840D CNC controller.

Start-up: simple and safe

The JUNKER hardware and software concept significantly reduces installation time for the TAPOMAT thread and first cut grinding machine. Special software tools are used to ensure safe and gradual start-up.

Teleservice: swift and efficient

The first port of call for all questions and problems are the staff at JUNKER Service. All data available on the machine's status can be analysed online as required. This JUNKER service increases system availability, thus keeping service costs low.

The benefits of the hardware and software concept

- All components are accessible via Teleservice
- Identical operation of different machines, irrespective of the controller used
- Standardised operator interface for all components
- Automatic data backup, including the settings for all externally purchased assemblies

EJ-OP operator panel: standard for all machines

- Graphic display of interactive processes during programming and operation
- Reduced training requirement
- Minimised risk of operating errors
- Swift retooling and set-up
- All machining parameters stored
- Machine programming, optionally also centrally, e. g. during preparation phase

Erwin Junker EJ-OP operator panel

Tool change with workpiece administration

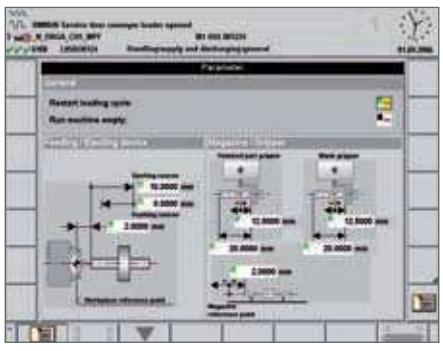

Setting up loader

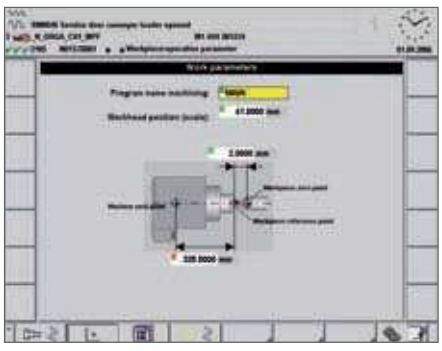

Workpiece data

Centreless Cylindrical Grinding

▶ efficient ▶ precise ▶ reliable

Machine concept

The BB 10 CNC centreless cylindrical grinding machine has been further developed to take advantage of the latest advances in grinding technology. Practical experience, the latest design principles, and the most modern CNC technologies have all been employed to meet the exact needs of the machine operator.

High efficiency both for large series production and for small batches through fast process sequences.

Grinding cell: characteristic for dimensional accuracy and surface quality

Workpiece data

Workpiece diameter: . . . . . 3 - 100 mm
Workpiece length: . . . . . variabel

Grinding spindle unit

Grinding wheel dimensions (DxBxd): . . 500x200x305 mm
Control wheel dimensions (DxBxd): . . . 300x200x127 mm
Drive power, standard: . . . . . 22 kW
Circumferential speed: . . . . . max. 45 m/s
Resolution of the infeed axes: . . . . . 0,0005 mm

Machine data

Feed of grinding and control heads: . . . X1/X2-axis, CNC
Feed of diamond grinding-wheel dresser: . . U1-axis, CNC
Longitudinal feed of grind.-wheel dresser: . W1-axis, CNC
Feed of diamond control-wheel head: . . . . . U2-axis, CNC
Longitudinal feed of contr.-wheel dresser: . W2-axis, CNC
Rotational speed of control-wheel spindle: SP2-axis
Dimensions of machine
(B x D x H): . . . . . 3.190 x 4.035 x 2.200 mm
Weight of machine: . . . . . ca. 4.800 kg

Design characteristics

- Compact machine layout with high static, dynamic and thermal stability.
- Precision grinding spindle on one-sided hydrodynamic bearings.
- Systems for dressing grinding and control wheels.

Performance profile

- Grinding operations:
  through-feed grinding, plunge grinding
- Grinding programs:
  manual, automatic
- Truing programs:
  manual, automatic with compensation

Control panel

BSH Holice Ltd.
Sokolovská 68/105
18600 Praha 8-Karlín
Czech Republic

Phone: +420 (0)2 24890610
Fax: +420 (0)2 24818244
E-Mail: info@junker.cz
www.junker-group.com

We reserve the right to make changes in the interests of technical progress.

3.14962 E 0302

BB 10 CNC

High-Precision
Centreless Grinding

JUNKER
BSH Machines